INSTALLATION & OWNER'S MANUAL

AMERICAN FYRE DESIGNS™
outdoor Products collection

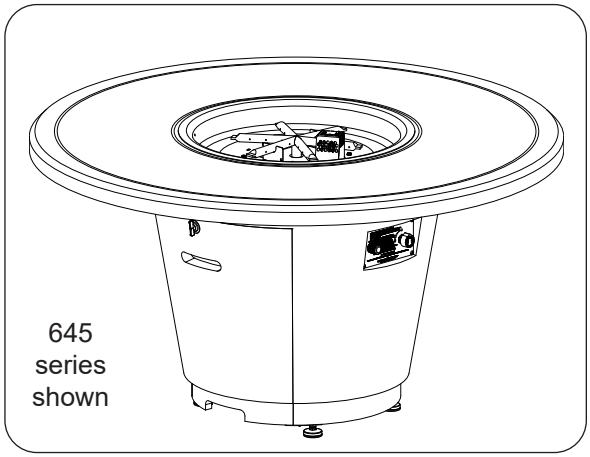

645 series shown

Series:
450, 460, 580, 581, 585, 586, 587, 588, 589, 635, 640, 642, 645, 725, 726, 735, 736, 738, 770, 775, 782, 783, 784, 785, 788

(Media purchased separately)

Certified to:
ANSI Z21.97/CSA 2.41 for outdoor decorative gas appliances

PFS® C US

NATIONAL FIREPLACE INSTITUTE NFI CERTIFIED www.nficertified.org — We recommend that our gas hearth products be installed and serviced by professionals who are certified in the U.S. by the National Fireplace Institute® (NFI) as NFI Gas Specialists.

⚠ WARNING: For Outdoor Use Only.
Installation and service must be performed by an NFI certified or other qualified installer, service agency, or the gas supplier.

OUTDOOR FIRETABLES

⚠ DANGER
FIRE OR EXPLOSION HAZARD
If you smell gas:
- **Shut off gas to the appliance.**
- **Extinguish any open flame.**
- **If odor continues, leave the area immediately.**
- **After leaving the area, call your gas supplier or fire department.**

Failure to follow these instructions coud result in fire or explosion, which could cause property damage, personal injury, or death.

⚠ WARNING
Do not store or use gasoline, or other flammable vapors and liquids, in the vicinity of this or any other appliance.
A LP- cylinder not connected for use shall not be stored in the vicinity of this or any other appliance.

⚠ WARNING: If the information in this manual is not followed exactly, a fire or explosion may result causing property damage, personal injury, or loss of life.

⚠ DANGER

CARBON MONOXIDE HAZARD

This appliance can produce carbon monoxide which has no odor.

Using it in an enclosed space can kill you.

Never use this appliance in an enclosed space such as a camper, tent, car, or home.

INSTALLER: Leave this manual with the appliance.
CONSUMER: Retain this manual for future reference.

Important: Read these instructions carefully before starting installation of the unit.

⚠ WARNING
Improper installation, adjustment, alteration, service, or maintenance can cause property damage, personal injury, or loss of life. Read the installation, operating and maintenance instructions thoroughly before installing or servicing this equipment.

This appliance is designed as an **attended appliance**. **DO NOT** leave this appliance burning when unattended.

IMPORTANT

For safe operation and proper performance of this product and to comply with certification, listings, and building code acceptances, use ONLY Peterson AFD controls, parts, decorative media, and accessories that have been specifically listed or certified for use with this burner system. Use of other controls, parts, or accessories is prohibited and will void all warranties, certifications, listings, and building code approvals, and may cause property damage, personal injury, and loss of life.

CODE AND SUPPLY REQUIREMENTS:
The installation must conform with local codes and ordinances, or, in the absence of local codes, with the latest *National Fuel Gas Code, ANSI Z223.1.*

AMERICAN FYRE DESIGNS™
outdoor Products collection

INSTALLATION ET MODE D'EMPLOI

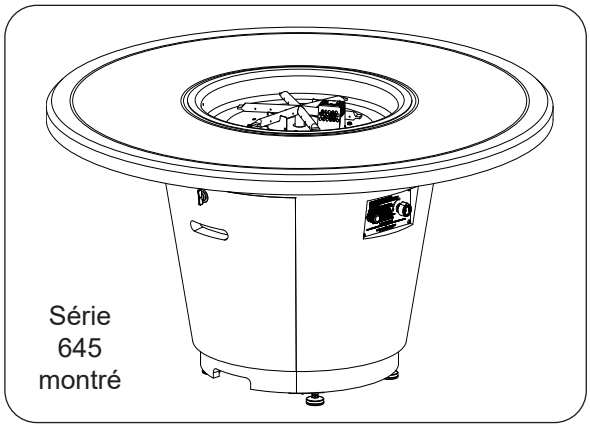

Série 645 montré

Série:

450, 460, 580, 581, 585, 586, 587, 588, 589, 635, 640, 642, 645, 725, 726, 735, 736, 738, 770, 775, 782, 783, 784, 785, 788

(Médias achetés séparément)

Certifié à:
ANSI Z21.97/CSA 2.41 pour les appareils à gaz décoratifs extérieurs

PFS® C US

NATIONAL FIREPLACE INSTITUTE NFI CERTIFIED www.nficertified.org — We recommend that our gas hearth products be installed and serviced by professionals who are certified in the U.S. by the National Fireplace Institute® (NFI) as NFI Gas Specialists.

⚠ AVERTISSEMENT: pour usage extérieur uniquement. L'installation et l'entretien doivent être effectués par un installateur certifié NFI ou par un autre installateur qualifié, une agence de service ou le fournisseur de gaz.

FIRETABLES PLEIN AIR

⚠ DANGER
RISQUE D'INCENDIE OU D'EXPLOSION
Si vous sentez du gaz:

- **Coupez le gaz à l'appareil.**
- **Éteignez toute flamme nue.**
- **Si l'odeur persiste, quittez immédiatement la zone.**
- **Après avoir quitté la zone, appelez votre fournisseur de gaz ou le service d'incendie.**

Le non-respect de ces instructions peut entraîner un incendie ou une explosion, ce qui pourrait provoquer des dommages matériels, des blessures corporelles ou la mort.

⚠ AVERTISSEMENT
Ne pas stocker ni utiliser d'essence ou d'autres vapeurs et liquides inflammables à proximité de cet appareil ou de tout autre appareil.
Une bouteille LP non connectée pour utilisation ne doit pas être stockée à proximité de cet appareil ou de tout autre appareil.

⚠ AVERTISSEMENT: si les informations contenues dans ce manuel ne sont pas suivies à la lettre, un incendie ou une explosion peut en résulter, causant des dommages matériels, des blessures corporelles ou la mort.

⚠ DANGER

RISQUE DE MONOXYDE DE CARBONE
Cet appareil peut produire du monoxyde de carbone qui n'a pas d'odeur.
L'utiliser dans un espace clos peut vous tuer.
N'utilisez jamais cet appareil dans un espace clos tel qu'un camping-car, une tente, une voiture ou une maison.

INSTALLATEUR: Laissez ce manuel avec l'appareil.
CONSOMMATEUR: Conservez ce manuel pour référence future.

Important: Lisez ces instructions soigneusement avant de commencer l'installation de l'unité.

⚠ AVERTISSEMENT
L'installation, l'ajustement, le changement, le service, ou l'entretien inexact peuvent causer des dégats matériels, le dommage corporel, ou des pertes humaines. Lisez l'installation, l'opération et les instructions d'entretien complètement avant d'installer ou entretenir cet équipement.

Cet appareil est conçu comme un appareil surveillé. Ne laissez pas cet appareil brûler sans surveillance.

IMPORTANT

Pour un fonctionnement en toute sécurité et le bon fonctionnement de ce produit et pour se conformer aux certifications, listes et acceptations des codes du bâtiment, utilisez UNIQUEMENT les commandes, pièces, supports décoratifs et accessoires Peterson AFD spécialement répertoriés ou certifiés pour être utilisés avec ce système de brûleur. L'utilisation d'autres commandes, pièces, ou accessoires est interdite et videra toutes les garanties, certifications, listes, et approbations de codes du bâtiment, et peut causer des dégats matériels, le dommage corporel, et des pertes humaines.

CONDITIONS DE CODE ET D'APPROVISIONNEMENT:
L'installation doit se conformer aux codes locaux et aux ordonnances, ou, en l'absence des codes locaux, au plus défunt code national de gaz de carburant, la *norme ANSI Z223.1.*

PROPANE GAS CYLINDER WARNING (IF APPLICABLE)

⚠ DANGER: FLAMMABLE GAS UNDER PRESSURE.
LEAKING LP-GAS MAY CAUSE A FIRE OR EXPLOSION IF IGNITED CAUSING SERIOUS BODILY INJURY OR DEATH.
CONTACT LP GAS SUPPLIER FOR REPAIRS, OR DISPOSAL OF THIS CYLINDER OR UNUSED LP-GAS.

⚠ WARNING: FOR OUTDOOR USE ONLY.*
DO NOT USE OR STORE CYLINDER IN A BUILDING, GARAGE OR ENCLOSED AREA.

⚠ WARNING:

- Know the odor of LP-gas. If you hear, see or smell leaking LP-gas, immediately get everyone away from the cylinder and call the Fire Department. Do not attempt repairs.
- Caution your LP-gas supplier to:

  Be certain cylinder is purged of trapped air prior to first filling.
  Be certain not to over fill the cylinder.
  Be certain cylinder requalification date is checked.
- LP-gas is heavier than air and may settle in low places while dissipating.
- Contact with the liquid contents of cylinder will cause freeze burns to the skin.
- Do not allow children to tamper or play with cylinder.
- When not connected for use, keep cylinder valve turned off. Self contained appliances shall be limited to a cylinder of 20 lb capacity or less.
- Do not use, store or transport cylinder where it would be exposed to high temperatures. Relief valve may open allowing a large amount of flammable gas to escape.
- When transporting, keep cylinder secured in an upright position with cylinder valve turned off.
- 585, 587, 738, 785 Models: A horizontal 20lb DOT Type LP cylinder is required for operation. Installation must be performed by a qualified installer, service agency or gas supplier. DO NOT use a vertical 20lb cylinder – a vertical cylinder must never be operated on its side. ONLY fill a horizontal tank in the vertical postion. DO NOT overfill. A fire causing death or serious injury may occur.

WHEN CONNECTING FOR USE:

- Use only in compliance with applicable codes.
- Read and follow all labels on the cylinder.
- Read and follow manufacturer's instructions.
- Consult manufacturer's instructions concerning the cylinder connection provided with your appliance.
- Be sure regulator vent is not pointing up.
- Turn off all valves on the appliance.
- Do not check for gas leaks with a match or open flame. Apply soapy water at areas marked "X". Open cylinder valve. If bubble appears, close valve and have LP-gas service person make needed repairs. Also, check appliance valves and connections to make sure they do not leak before lighting appliance.
- Light appliance(s) following manufacturer's instructions.
- When appliance is not in use, keep the cylinder valve closed.

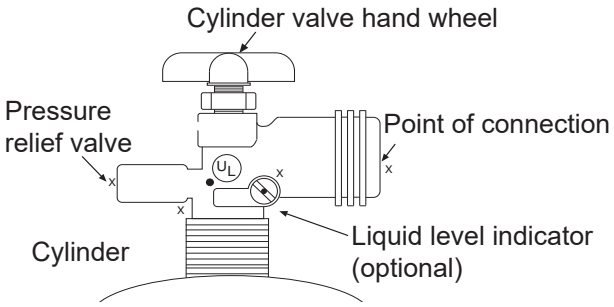

DO NOT REMOVE, DEFACE, OR OBLITERATE THE LABEL ON THE CYLINDER
*** EXCEPT AS AUTHORIZED BY ANSI/NFPA 58.**

⚠ DANGER. Do not store a spare LP cylinder under or near this or any appliance or other heat sources. NEVER fill an LP cylinder beyond 80% full: a fire causing death or serious injury may occur.

IN ADDITION TO THIS PAGE, FOLLOW ALL INFORMATION IN THIS MANUAL REGARDING PROPANE CYLINDERS, AND FOLLOW ALL LABELS ON THE CYLINDER.

AVERTISSEMENT DE CYLINDRE DE GAZ PROPANE (LE CAS ÉCHÉANT)

⚠ DANGER: Gaz inflammable sous pression.Une fuite de GPL peut causer un incendie ou une explosion sienflammée entraînant des blessures corporelles graves ou la mort. Communiquer avec le fournisseur de GPL pour les réparations oupour disposer de cette bouteille ou du GPL non utilisé.

⚠AVERTISSEMENT: Pour usage à l'extérieur seulement.*Ne pas utiliser ni entreposer la bouteille dans un bâtiment, un garageou un endroit fermé.

⚠AVERTISSEMENT:

- Apprenez à reconnaître l'odeur du GPL. Si vous entendez, voyez ou sentez une fuite de GPL,éloignez immédiatement toutes les personnes dela bouteille et appelez le service d'incendie. Netentez aucune réparation.
- Avertissement pour le fournisseur de GPL: Assurez-vous que la bouteille a été purgée de tout l'air avant de procéder au remplissage initial.Assurez-vous de ne pas trop remplir la bouteille. Assurez-vous que la date de requalification de labouteille a été vérifiée.
- Le GPL est plus lourd que l'air et peut se déposer près du sol avant de se dissiper
- Le contact avec le contenu liquide de la bouteillepeut causer des brûlures à la peau par le froid.
- Ne pas permettre aux enfants de jouer avec la bouteille.
- Si la bouteille n'est pas raccordée pour utilisation, s'assurer que le robinet est fermé.Les bouteilles des appareils autonomes decuisson en plein air doivent être limitées àune capacité d'au plus 20 lb.
- Ne pas utiliser, entreposer ni transporter une bouteille si elle risque d'être exposée à des températures élevées. La soupape de décharge pourrait s'ouvrir et libérer une grande quantité de gaz inflammable.
- Lors du transport, sécuriser la bouteille enposition debout et s'assurer que le robinet estfermé.
- Modèles 585, 587, 738, 785 : Une bouteille horizontale de GPL de type DOT de 20 lb est nécessaire pour le fonctionnement de l'appareil. L'installation doit être effectuée par un installateur qualifié, une agence de service ou un fournisseur de gaz. NE PAS utiliser une bouteille verticale de 20 lb - une bouteille verticale ne doit jamais être utilisée sur le côté. Remplir UNIQUEMENT un réservoir horizontal en position verticale. Ne pas trop remplir. Un incendie entraînant la mort ou des blessures graves peut se produire.

Lors du raccordement pour utilisation :

- Utilisez uniquement conformément aux codes en vigueur.
- Lisez et suivez toutes les étiquettes sur le cylindre.
- Lisez et suivez les instructions du fabricant
- Consultez les instructions du fabricant visant le raccordement de la bouteille fournie avec l'appareil.
- Assurez-vous que l'évent du régulateur n'est pas dirigé vers le haut.
- Fermez tous les robinets sur l'appareil.
- Ne pas utiliser d'allumette ou de flamme nue pour vérifier la présence d'une fuite de gaz. Appliquez une solution d'eau savonneuse sur les zones marquées d'un « X ». Ouvrir le robinet de la bouteille. Si des bulles se forment, fermez le robinet et demandez à une personne qualifiée pour l'entretien d'appareils au GPL de faire les réparations requises. Avant d'allumer l'appareil, vérifiez aussi les robinets et les raccordements de l'appareil afin de vous assurer qu'il n'y a pas de fuite.
- Allumez l'appareil selon les instructions du fabricant.
- Lorsque vous n'utilisez pas l'appareil, gardez le robinet de la bouteille fermé.

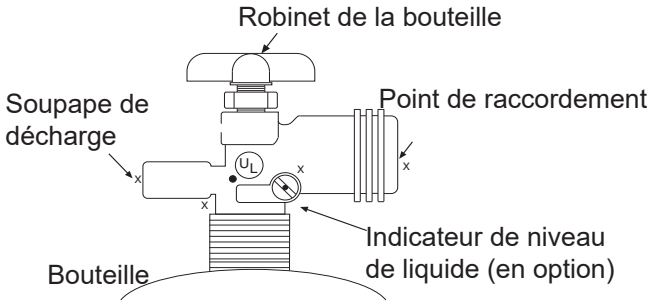

NE PAS RETIRER, BARBOUILLER OU EFFACER CETTE ÉTIQUETTE*SAUF DANS LES CAS PERMIS SELON LES NORMES L'ANSI/NFPA 58ou la CSA B149.

⚠DANGER. Ne stockez pas de bouteille de GPL de rechange sous ou à proximité de cet appareil ou de tout autre appareil.

NE remplissez JAMAIS une bouteille de PL au-delà de 80%: un incendie causant la mort ou des blessures graves peut survenir.

EN PLUS DE CETTE PAGE, SUIVEZ TOUTES LES INFORMATIONS DE CE MANUEL CONCERNANT LES BOUTEILLES DE PROPANE ET SUIVEZ TOUTES LES ÉTIQUETTES SUR LA BOUTEILLE.

TABLE OF CONTENTS

GETTING STARTED

PRE-INSTALLATION AND PREPARATION SAFETY GUIDELINES 6
INSTALLATION SAFETY GUIDELINES 7
OPERATING THE UNIT SAFELY AND CORRECTLY 7
SAFE USE & MAINTENANCE OF PROPANE GAS CYLINDERS 9
GAS SAFETY INFORMATION 12
WHEN USING PROPANE GAS 12
WHEN USING NATURAL GAS 12
INSTALLATION SAFETY GUIDELINES 12
OPERATION SAFETY GUIDELINES 12
ELECTRICAL SAFETY INFORMATION 13
SPECIFICATIONS AND DIMENSIONS 14
REQUIRED PRIMARY MEDIA OPTIONS 15
SECONDARY MEDIA OPTIONS (optional) 15
PROPANE CYLINDER ENCLOSURE REQUIREMENTS (IF APPLICABLE) 17
PROPANE CYLINDER ENCLOSURE PARAMETERS 17
PROPANE CYLINDER ENCLOSURE VENTILATION AND DRAINAGE 18
MINIMUM CLEARANCES 19
TOOLS REQUIRED 19
PARTS LIST 20
IDENTIFICATION PARTS LIST 24

INSTALLATION

IMPORTANT SAFETY INFORMATION 26
INSTALLATION 26
BEFORE YOU BEGIN 26
LOCATION 26
GAS SUPPLY SETUP (if applicable) 27
ELECTRICAL SETUP (if applicable) 27
CONSTRUCT L.P. CYLINDER ENCLOSURE (if applicable) 28
FIRETABLE ASSEMBLY 29
CONNECT GAS SUPPLY 37
LEAK TEST 40
CONNECT POWER SUPPLY CORD (if applicable) 40
INSTALL BURNER ASSEMBLY (if needed) 40
INSTALL BATTERIES (if applicable) 40
LIGHTING TEST 40
REPLACE/CLOSE STORAGE DOOR/DRAWER (if applicable) 40
DECORATIVE MEDIA PLACEMENT 41
REQUIRED BASE MEDIA (SUPPLIED) 41
PRIMARY AND SECONDARY MEDIA OPTIONS 42
APP SETUP (H MODELS ONLY) 43
OPTIONAL ACCESSORIES 44
STAINLESS STEEL & GFRC COVERS 44
OPTIONAL FABRIC COVERS 44
OPTIONAL WIND GUARDS 44

USE, CARE, & SERVICE

LIGHTING INSTRUCTIONS - FYRESTARTER MODELS 45
FOR YOUR SAFETY, READ BEFORE LIGHTING 45
BURNER OPERATION - MANUAL MODE 45
BURNER OPERATION - REMOTE MODE 47
USB OPERATION - FYRESTARTER MODELS 49
TURNING ON AND USE 49
TURNING OFF 49
LIGHTING INSTRUCTIONS - MANUAL FLAME SENSING CONTROL MODELS 51
FOR YOUR SAFETY, READ BEFORE LIGHTING 51
TO SHUT OFF GAS TO THE APPLIANCE 51
SERVICING AND CLEANING 52
ANNUAL CLEAN / INSPECTION GUIDELINES 52
CONCRETE CARE 53
FUEL CONVERSION KITS 53
BATTERY INSTALLATION/REPLACEMENT (if applicable) 53
FUSE RESET (if applicable) 54
NOTES PAGE 55
TROUBLESHOOTING 56
BLUETOOTH OR APP ISSUES 59
WARRANTY 60

IMPORTANT SAFETY INFORMATION

Congratulations on your purchase of an American Fyre Designs outdoor gas firetable. Made with pride in America, your new firetable complies with national safety standards and when installed per these instructions and used as intended it will provide warmth and comfort to your outdoor area for many years.

Prior to installation and operation ensure that all specifications, dimensions, propane cylinder enclosure requirements (if applicable), and minimum clearances stated in this manual are observed. You must read all warnings and safety information, and understand all of the information in this manual. All installation requirements must be observed and met.

PRE-INSTALLATION AND PREPARATION SAFETY GUIDELINES

A. **A shut-off valve (not included) in the gas supply line is required.** It must be installed within 6 feet of unit and must be easily accessible. Refer to the NFPA 54 guidelines for further details.

B. A sediment trap in the gas supply line is recommended where applicable. It should be installed downstream of the shut-off valve as close to the unit as possible. Refer to the NFPA 54 guidelines for further details.

C. Before installing this unit, check the MINIMUM CLEARANCES section to ensure that the surrounding area is **properly sized for the installation.**

D. The unit is for outdoor use only. **DO NOT** install or use this appliance inside a building, garage, or any other enclosed area, including recreational vehicles and/or boats. **THIS UNIT MUST BE INSTALLED SO THAT THE VENT OPENINGS AND SURROUNDING AREA OF THE UNIT REMAIN CLEAR AND FREE AT ALL TIMES. IF APPLICABLE, SEE THE PROPANE CYLINDER ENCLOSURE REQUIREMENTS SECTION.**

E. **SOLID FUEL MUST NOT BE BURNED in the unit.**

F. **CHECK GAS TYPE** (natural gas or propane): The gas supply you intend to use may not be the same as that stated on the unit rating plate as purchased. If the gas supply is different, **convert the unit to the gas type you intend to use (IF PERMITTED).** See the FUEL CONVERSION KIT section and contact the dealer for assistance.

G. **FOR NATURAL GAS:** The minimum inlet gas-supply pressure for purposes of input adjustment is **5"** water column (w.c.), and the maximum inlet gas-supply pressure is **10.5 "** w.c.

FOR PROPANE GAS: The minimum inlet gas-supply pressure for purposes of input adjustment is **11"** w.c., and the maximum inlet gas-supply pressure is **13"** w.c. **DO NOT INSTALL THIS UNIT IF MINIMUM PRESSURE IS NOT AVAILABLE OR IF MAXIMUM PRESSURE IS EXCEEDED.**

H. **The gas piping system must be sized to provide minimum inlet pressure at the maximum flow rate (BTU/hr)**. Undue pressure loss will occur if the pipe is too small, or the run is too long. Gas supply pipe must be $^1/_2$" minimum interior diameter. If the gas line is longer than 20', a larger diameter line may be necessary. Refer to the NFPA 54 guidelines for further details.

I. For installations at elevations above 2,000 ft., contact your local dealer or gas supplier before installing. Input ratings should be reduced approximately 4% per 1,000 ft. above sea level. Refer to National Fuel Gas Code.

J. The unit and its individual shut-off valve must be disconnected from the gas-supply piping system during any pressure testing of that system at test pressures in excess of $^1/_2$ psi (3.5 kPa). This is accomplished by closing the gas-supply line valve. The unit must be isolated from the gas-supply piping system by closing its individual manual shut-off valve during any pressure testing of the gas-supply piping system at test pressures equal to or less than $^1/_2$ psi (3.5 kPa).

K. When an appliance is for connection to a fixed piping system, the installation must conform with local codes, or in the absence of local codes with the National Fuel Gas Code, ANSI Z223.1/NFPA 54; national Fuel Gas Code, Natural Gas and Propane Installation Code, CSA B149.1; or Propane Storage and Handling Code, CSA B149.2, as applicable. The appliance, when installed, must be electrically grounded in accordance with local codes, or in the absence of local codes with the National Electrical Code, ANSI/NFPA 70; or the Canadian Electrical Code, CSA C22.1, if applicable.

Electrical Grounding Instructions (if applicable) - Select models are equipped with a three-prong (grounding) plug for your protection against shock hazard and should be plugged directly into a properly grounded three-prong receptacle. Do not cut or remove the grounding prong from this plug.

L. **INSTALLER NOTE:** This unit should be installed so that it can be removed if service is required.

M. **GAS-SUPPLY PLUMBING REQUIREMENTS**
Use a pipe joint compound resistant to all gasses on all NPT pipe fittings. Make sure to tighten every fitting securely. **Do not use pipe joint compound to connect flare fittings.** Bring the gas-supply pipe up from beneath the enclosure near its center (if applicable).

N. **DECORATIVE MEDIA**: The included lava granules, and additional primary decorative media (not included), are required for safe operation and proper performance. You MUST purchase the additional American Fyre Designs media separately (if using primary media other than the included lava granules). Numerous options are available. See the SPECIFICATIONS AND DIMENSIONS (media option) section for details.

CAUTION: Installation and maintenance must be done by an NFI Certified or other qualified professional service technician. Installer, read these instructions before installing this product. Be sure you understand all safety precautions and warnings contained in this manual.

INSTALLATION SAFETY GUIDELINES

A. Carefully inspect for shipping damage. If any parts are damaged, contact your dealer.

B. Installation and repair should be done by a qualified professional service technician. The appliance should be inspected before use and at least annually by a qualified service person. More frequent cleaning may be required as necessary. It is imperative that control compartment, burners and circulating air passageways of the appliance are kept clean.

C. **WEAR GLOVES AND USE EXTREME CAUTION WHENEVER INSTALLING AND HANDLING THIS PRODUCT AND ITS ACCESSORIES AS CERTAIN COMPONENTS HAVE SHARP EDGES THAT CAN CAUSE PERSONAL INJURY.**

D. Correct installation and proper placement of the unit and decorative media **is crucial** to the safe performance of the unit. See DECORATIVE MEDIA PLACEMENT section for details.

E. **DO NOT** install the unit under any overhead construction that is less than 6 feet above the top of the unit.

F. Ensure that the unit (and propane cylinder enclosure - if applicable) is (are) installed on a hard and level surface.

G. **This unit must be installed so that the vent openings and surrounding area of the unit remain clear and free at all times. If applicable, see PROPANE CYLINDER ENCLOSURE REQUIREMENTS section.**

H. Due to high temperatures, the enclosure and/or unit must be located out of traffic areas and away from combustibles.

I. If applicable, ensure all propane cylinder enclosure construction, ventilation, and water drainage requirements are met. See PROPANE CYLINDER ENCLOSURE REQUIREMENTS section.

J. **IF APPLICABLE, KEEP THE PILOT/IGNITER/THERMOCOUPLE SCREEN CLEAR OF DECORATIVE MEDIA AND ANY OTHER ITEMS / DEBRIS AT ALL TIMES. THIS WILL ALLOW FOR PROPER IGNITION AND OPERATION. DO NOT COVER.**

OPERATING THE UNIT SAFELY AND CORRECTLY

A. **This product is a decorative gas appliance. It is not a cooking appliance.**

B. **SOLID FUEL MUST NOT BE BURNED in the unit.**

C. When shutting the unit down—be sure to TURN THE CONTROL VALVE FULLY OFF.

D. Children MUST be carefully supervised when they are in the area of this appliance.

E. **DO NOT** rest, hang, or place any part of the body, clothing, or other flammable materials on or near the unit surround. Children and adults should be alerted to the hazard of high surface temperatures and should stay away to avoid burns or clothing ignition. **DO NOT** lean over the unit when lighting or when in use.

F. Every time you use the unit, **make sure that**:

- The area around the enclosure and/or unit is clear and free from combustible materials, gasoline and other flammable vapors and liquids.
- The vent openings and surrounding area of the enclosure and/or unit are clear and free at all times.
- **THE PILOT/IGNITER/ THERMOCOUPLE SCREEN IS CLEAR OF DECORATIVE MEDIA AND ANY OTHER ITEMS / DEBRIS (IF APPLICABLE). DO NOT COVER.**
- The hose is inspected (if applicable). See the SAFE USE & MAINTENANCE OF PROPANE-GAS CYLINDERS section.
- The burner flame appears normal. If the flame is uneven, low, or high, immediately shutdown and refer to the TROUBLESHOOTING section for details.

G. **WARNING: HOT WHILE IN OPERATION AND FOLLOWING OPERATION. Serious injury can occur! DO NOT** throw trash, paper, or other flammable materials onto the unit. **Adults MUST be present when this gas appliance is operating. This appliance MUST NOT be left burning when unattended or while anyone is sleeping.**

DO NOT operate this unit when exposed to heavy rain. Operating in heavy rain can cause unit to turn on and off or not stay lit.

DO NOT operate this unit in high-wind conditions. Operating in high-wind conditions may expose your unit to direct flame, which will result in cracking and discoloration to the finish.

H. **DO NOT** continue using if you smell unusual odors, or have headaches, nausea, or dizziness.

I. **DO NOT** store any combustible materials, gasoline, and any other flammable vapors/liquids in the vicinity of the unit. Provide adequate clearance for servicing and operation.

J. Matches, paper, garbage, or any other material must not be thrown onto the unit or into the flame.

K. **DO NOT** use the unit if any part of it has been underwater. Immediately call a qualified professional service technician to inspect the unit and to replace any part of the control system and any gas control that has been underwater.

L. **WARNING:** Food cannot be consumed after coming in direct contact with the surface of the unit due to possible contamination.

UTILISATION SÛRE ET ENTRETIEN DES CYLINDRES DE GAZ DE PROPANE

IMPORTANT POUR VOTRE SÛRETÉ

LISEZ ET SUIVEZ TOUS LES AVERTISSEMENTS ÉQUIPÉS DE VOTRE CYLINDRE DE GAZ DE PROPANE.

En actionnant cet appareil avec un cylindre de gaz de propane ON DOIT observer ces instructions et avertissements.

LE MANQUE DE FAIRE AINSI PEUT AVOIR COMME CONSÉQUENCE UNE INCENDIE OU UNE EXPLOSION SÉRIEUSE.

CYLINDRE ET CONDITIONS ET CARACTÉRISTIQUES DE CONNECTEUR

a. Les bouteilles, les vannes et les tuyaux de propane doivent être entretenus et inspectés avant chaque utilisation. Ils doivent être remplacés en cas de dommages visibles. Si le tuyau est coupé ou présente des signes d'abrasion ou d'usure, il doit être remplacé avant utilisation (**voir e.**).

b. Cette unité, lorsqu'elle est utilisée avec une bouteille, doit être connectée à une bouteille standard de gaz propane de 5 gallons (20 lb) équipée d'un dispositif anti-débordement répertorié. L'appareil est obligatoire sur toutes les bouteilles vendues depuis le 1er octobre 1998 afin d'empêcher tout remplissage excessif.

c. Les dimensions du cylindre doivent être d'environ 12 " (30,5 cm) de diamètre et 18" (45,7 cm) de hauteur. Les bouteilles doivent être construites et marquées conformément aux spécifications du ministère des Transports (DOT) pour les bouteilles à gaz LP ou à la norme relative aux bouteilles, sphères et tubes pour le transport des marchandises dangereuses et à la Commission, CAN / CSA-B339, selon le cas.

d. La bouteille utilisée doit comporter un collier pour protéger le robinet de la bouteille. Le système d'alimentation de la bouteille doit être conçu pour le retrait de la vapeur. Voir Fig. 8-1.

e. Lorsqu'il est utilisé avec une bouteille, le système d'alimentation en gaz doit être utilisé avec un régulateur de pression. L'ensemble régulateur et le tuyau de pression (Fig. 8-1) fourni avec cet appareil de gaz à l'extérieur **(certains modèles LP seulement)** doit être utilisé. Les régulateurs de pression d'origine et de remplacement et les ensembles de tuyaux doivent être ceux spécifiés par le fabricant pour la connexion avec un dispositif de connexion de bouteille identifié comme Type I par l'ANSI Z 21.58/CGA 1.6 et doivent être conformes à UL 144 en tant que partie du gaz propane autonome système d'alimentation (voir la liste des pièces pour les informations de commande).

f. La valve de cylindre de gaz de propane doit être équipée d'un dispositif d'accouplement de raccordement de cylindre, décrit comme type I dans la norme définie dans le e. de paragraphe ci-dessus. Ce dispositif est généralement décrit comme coupleur de fil de point culminant.

g. Si la bouteille est livrée avec un bouchon anti-poussière, placez-le sur la sortie du robinet de la bouteille chaque fois que la bouteille n'est pas utilisée. Installez uniquement le type de capuchon anti-poussière sur la sortie du robinet de la bouteille qui est fourni avec le robinet de la bouteille. D'autres types de bouchons ou de bouchons peuvent entraîner des fuites de propane.

OPÉRATION DE COUPLEUR

Pour relier le regulator/hose à l'ajustage de précision de valve de cylindre de gaz de propane: Serrez l'écrou de main sur le régulateur au-dessus de l'ajustage de précision de fil de point culminant sur la valve de cylindre. Tournez l'écrou de main dans le sens des aiguilles d'une montre pour engager les fils et pour serrer jusqu'à ce que douillettement. L'utilisation des pinces ou de la clé ne devrait pas être nécessaire. Seulement le "propane" marqué par cylindres doit être employé.

Pour déconnecter: tournez l'écrou à main dans le sens antihoraire jusqu'à ce qu'il soit détaché (Fig. 8-1)

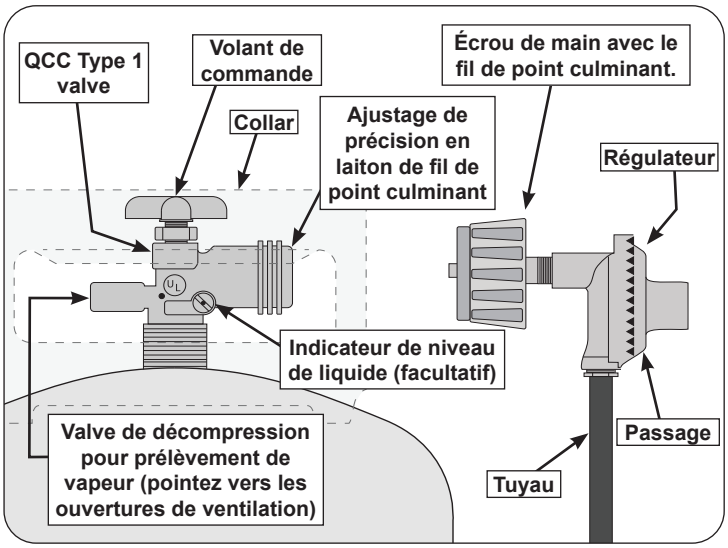

Fig. 8-1 Type coupleur de fil de point culminant d'I

SAFE USE & MAINTENANCE OF PROPANE GAS CYLINDERS

IMPORTANT FOR YOUR SAFETY
READ AND FOLLOW ALL WARNINGS PROVIDED WITH THE PROPANE-GAS CYLINDER.
When operating this appliance with a propane-gas cylinder, these instructions and warnings **MUST** be observed.
FAILURE TO DO SO MAY RESULT IN A SERIOUS FIRE OR EXPLOSION.

CYLINDER/CONNECTOR REQUIREMENTS

a. Propane-gas cylinders, valves, and hoses must be maintained in good condition and inspected before each use of appliance. They must be replaced if there is any visible damage. If hose is cut or shows excessive abrasion or wear, it must be replaced before using appliance (see **e**.).

b. This unit, when used with a cylinder, should be connected to a standard 5-gallon (20 lb.) propane-gas cylinder equipped with a listed overfilling prevention device. The device has been required on all cylinders sold since October 1,1998, to prevent overfilling.

c. Cylinder dimensions should be approximately 12" (30.5 cm) in diameter and 18" (45.7 cm) high. Cylinders must be constructed and marked in accordance with the U.S. Department of Transportation (D.O.T.) *Specifications for LP-Gas Cylinders,* or the Standard for *Cylinders, Spheres, and Tubes for Transportation of Dangerous Goods and Commission,* CAN/CSA-B339, as applicable.

d. The cylinder used must include a collar to protect the cylinder valve. The cylinder supply system must be arranged for vapour withdrawal. See Fig. 9-1.

e. When used with a cylinder, the gas supply system must be used with a pressure regulator. The pressure regulator and hose assembly (Fig. 9-1) supplied with this outdoor gas appliance **(select L.P. models only)** must be used. Original and replacement pressure regulator and hose assemblies must be those specified by the manufacturer for connection with a cylinder connecting device identified as Type I by the ANSI Z 21.58/CGA 1.6 and must comply with UL 144 as a part of the self-contained LP gas supply system (see PARTS LIST for ordering information).

f. The propane-gas cylinder valve must be equipped with a cylinder connection device, described as Type I in the standard defined in paragraph **e**. above. This device is commonly described as an Acme thread coupler.

g. If the cylinder comes with a dust plug, place it on the cylinder valve outlet whenever the cylinder is not in use. Only install the type of dust cap on the cylinder valve outlet that is provided with the cylinder valve. Other types of caps or plugs may result in leakage of propane.

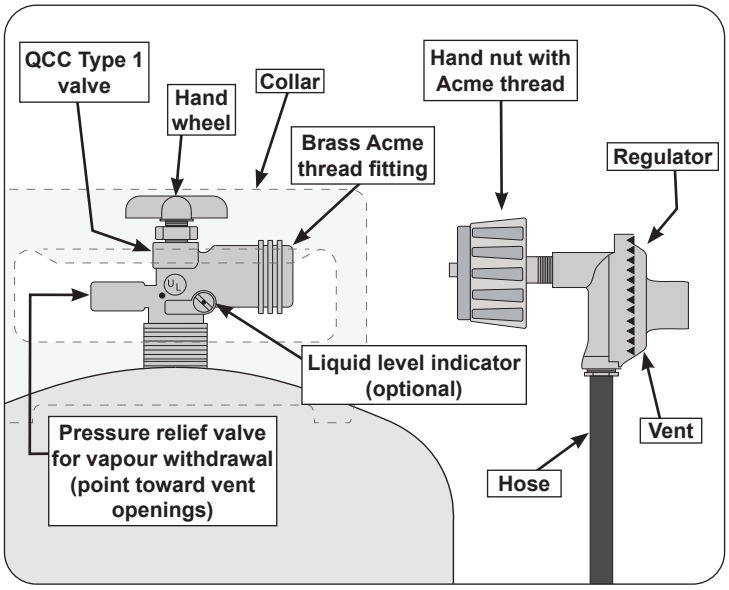

Fig. 9-1 Type I Acme thread coupler

COUPLER OPERATION

To connect the regulator/hose assembly to the propane-gas cylinder valve fitting: Press the hand nut on the regulator over the Acme thread fitting on the cylinder valve. Turn the hand nut clockwise to engage the threads and tighten until snug. The use of pliers or a wrench should not be necessary. Only cylinders marked “propane” may be used.

To disconnect: Turn the hand nut counterclockwise until detached (Fig. 9-1).

Important: Avant d'employer le unité, et ensuite chaque fois que le cylindre est enlevé et rattaché, examinez tous les raccordements pour déceler les fuites. Arrêtez les valves de unité et ouvrez la valve principale de cylindre, puis vérifiez les raccordements avec de l'eau savonneux. **NE JAMAIS UTILISER UNE FLAMME POUR DÉTECTER DES FUITES.** Réparez toutes les fuites avant d'allumer le unité.

ATTENTION: Tournez toujours la valve principale de cylindre de propane au loin après chaque utilisation, et avant de déplacer le unité et le cylindre, ou débrancher l'accouplement. Cette valve doit rester fermée et le cylindre a débranché alors que l'appareil n'est pas en service, quoique l'écoulement de gaz soit arrêté par un dispositif de sûreté quand le coupleur est débranché.

Inspectez soigneusement l'ensemble de tuyau chaque fois avant que le gaz soit allumé. Un tuyau fissuré ou effiloché doit être immédiatement remplacé.

Si l'appareil est stocké à l'intérieur, le cylindre doit être disconnected et a enlevé. Des cylindres Disconnected doivent être stockés dehors, hors de la portée des enfants, avec les prises de valve filetées étroitement installées, et ne doivent pas être stockés dans un bâtiment, le garage, ou n'importe quel autre secteur inclus.

POUR VOTRE SÛRETÉ

a. Ne stockez pas un cylindre de gaz disponible de propane dessous ou ne vous approchez pas de cet appareil.

b. Ne remplissez jamais cylindre au delà de 80 pour cent de plein.

c. SI L'INFORMATION DANS "A" ET "B" N'EST PAS SUIVIE EXACTEMENT, UN FEU CAUSANT LA MORT OU DES DOMMAGES SÉRIEUX PEUT SE PRODUIRE.

d. **Connexions CGA 791 sur les bouteilles de GPL :** l'élément d'étanchéité en élastomère de la face de la bouteille de ces appareils peut, au fil du temps, présenter des dommages ou une détérioration marqués et visibles susceptibles de provoquer une fuite même avec la connexion serrée. Une inspection visuelle du joint doit être effectuée chaque fois qu'une bouteille de GPL est remplacée ou remplie. Toute bouteille de GPL présentant des signes de dommages ou de détérioration, tel qu'illustré à la Fig. 10-1, y compris des fissures et des piqûres visibles, doit être remplacée.

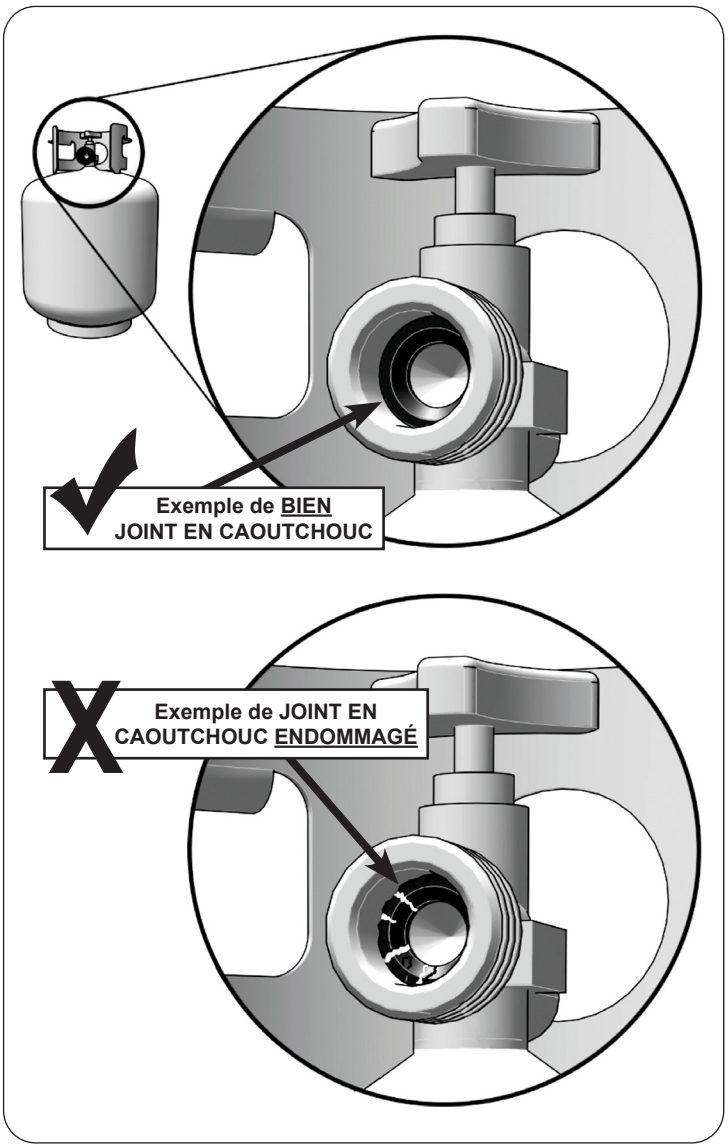

Fig. 10-1 Inspecter le joint en caoutchouc

Important: Before using the unit, and after each time the cylinder is removed and reattached, check the hose for wear (see **a**.) and check all connections for leaks. Turn off the unit valves and open the main cylinder valve, then check connections with soapy water. **NEVER USE A FLAME TO CHECK FOR LEAKS.** Repair any leaks before lighting the unit.

CAUTION: Always turn the propane cylinder main valve off after each use, and before moving the unit and cylinder or disconnecting the coupling. This valve must remain closed and the cylinder disconnected while the appliance is not in use, even though the gas flow is stopped by a safety feature when the coupler is disconnected.

Carefully inspect the hose assembly each time before the gas is turned on. A cracked or frayed hose must be replaced immediately.

If the appliance is stored indoors, the cylinder must be disconnected and removed. Disconnected cylinders must be stored outdoors, out of the reach of children, with threaded valve plugs tightly installed, and must not be stored in a building, garage, or any other enclosed area.

FOR YOUR SAFETY

A. DO NOT store a spare propane-gas cylinder under or near this appliance.

B. NEVER fill the cylinder beyond 80-percent full.

C. IF THE INFORMATION IN **a.** AND **b.** IS NOT FOLLOWED EXACTLY, A FIRE CAUSING DEATH OR SERIOUS INJURY MAY OCCUR.

D. **CGA 791 connections on LP gas cylinders:** The cylinder face elastomeric face seal element on these devices could, over time, show marked and visible damage or deterioration that might cause a leak even with the connection tightened. A visual inspection for the seal must be carried out every time a LP gas cylinder is replaced or refilled. Any LP gas cylinder showing signs of damage or deterioration as illustrated in Fig. 11-1, including visible cracks and pitting, must be replaced.

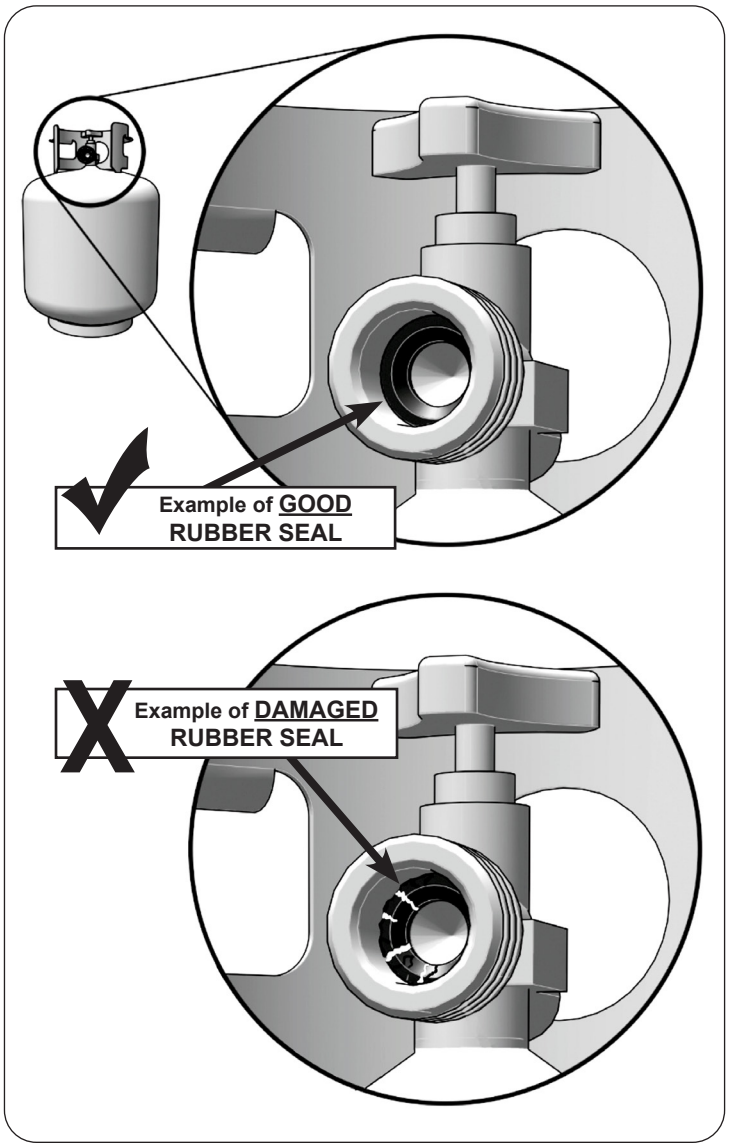

Fig. 11-1 Inspect rubber seal

GAS SAFETY INFORMATION

WHEN OPERATING THIS GAS APPLIANCE, ALL INSTRUCTIONS AND WARNINGS MUST BE OBSERVED. FAILURE TO DO SO MAY RESULT IN A FIRE OR EXPLOSION CAUSING PROPERTY DAMAGE, BODILY INJURY, OR DEATH.

WARNING

This appliance MUST be installed and operated according to the information found in this manual.

If applicable, the propane cylinder enclosure MUST be constructed and vented in accordance with local building and safety codes and should be approved by local code enforcement officials.

FAILURE TO PROPERLY VENT THE CYLINDER ENCLOSURE AND/OR UNIT MAY RESULT IN A FIRE OR EXPLOSION CAUSING PROPERTY DAMAGE, BODILY INJURY, OR DEATH.

A leaking gas connection or valve unintentionally left open will create a hazard.

WHEN USING PROPANE GAS

- **Propane gas** (also known as **L.P. gas**) is heavier than air and will accumulate or pool in an inadequately vented enclosure or recessed area.
- If a pool of **propane gas** is ignited, an explosion will occur. Adequate venting at the floor level, or the lowest point where gas could accumulate, eliminates this danger.

  For propane cylinder enclosures, refer to the **PROPANE CYLINDER ENCLOSURE REQUIREMENTS** section.

  Observe all local codes.
- DO NOT store a spare propane-gas cylinder in or near the cylinder enclosure or the unit.

WHEN USING NATURAL GAS

- **Natural gas** is lighter than air and will accumulate at the top of an inadequately vented enclosure.
- If an accumulation of **natural gas** is ignited, an explosion will occur. Adequate venting at the top of the unit eliminates this danger.

INSTALLATION SAFETY GUIDELINES

THIS UNIT MUST BE INSTALLED SO THAT THE VENT OPENINGS AND SURROUNDING AREA OF THE CYLINDER ENCLOSURE AND/OR UNIT REMAIN CLEAR AND FREE AT ALL TIMES. For propane cylinder enclosures, refer to the PROPANE CYLINDER ENCLOSURE REQUIREMENTS section for details.

CAUTION: FOR YOUR SAFETY, FOR PROPANE CYLINDER ENCLOSURES: you must provide openings in the enclosure for replacement air and ventilation (in case of possible leakage from the cylinder). Failure to do so may result in a fire or explosion causing property damage, bodily injury, or death. See the PROPANE CYLINDER ENCLOSURE REQUIREMENTS section for details.

The gas cylinder, regulator, and rubber hose must be in a location not subject to temperatures above 125° F (51° C).

IF A PROPANE CYLINDER IS INSTALLED: THE GUIDELINES FOUND IN THE **SAFE USE & MAINTENANCE OF PROPANE GAS CYLINDERS** SECTION - AND IF APPLICABLE THE **PROPANE CYLINDER ENCLOSURE REQUIREMENTS** SECTION - MUST BE FOLLOWED.

OPERATION SAFETY GUIDELINES

Every time you use the unit, **make sure that:**

1. The area around the cylinder enclosure and/or unit is clear and free from combustible materials, gasoline and flammable vapors/liquids.
2. The required vent openings and surrounding area of the enclosure and/or unit are clear and free at all times.
3. The hose is inspected (if applicable). See SAFE USE & MAINTENANCE OF PROPANE-GAS CYLINDERS section.

DO NOT store any combustible materials, gasoline, and any other flammable vapors/liquids in the vicinity of the enclosure and/or unit. Provide adequate clearance for servicing and operation.

ELECTRICAL SAFETY INFORMATION

- To protect against electric shock, do not immerse cord or plugs in water or other liquid.
- Unplug from the outlet when not in use and before cleaning. Allow to cool before putting on or taking off parts.
- Do not operate any outdoor gas appliance with a damaged cord, plug, or after the appliance malfunctions or has been damaged in any manner. Contact the manufacturer for repair.
- Do not let the cord touch hot surfaces.
- Do not use an outdoor gas appliance for purposes other than intended.
- When connecting, first make wire connections then plug appliance into the outlet.
- **Use only a properly wired and inspected 120VAC (15 AMP minimum) Ground Fault Circuit Interrupter (GFCI) GROUNDED 3-wire receptacle with this outdoor gas appliance.**
- The GFCI receptacle must be a WEATHER-PROOF IN-USE COVERED RECEPTACLE.
- Never remove the grounding plug or use with an adapter of 2 prongs.
- Use only extension cords with a 3 prong grounding plug, rated for the power of the equipment, and approved for outdoor use with a W-A marking.
- **The provisions of the National Electric Code as well as any local codes must be observed when installing the product.**

SPECIFICATIONS AND DIMENSIONS

Style	BTUs				Dimensions	Weight
	H Models		M Models			
	Nat. & L.P. High Setting	Nat. & L.P. Low Setting	Nat.	L.P.		
Meadow Round (450)	100,000	54,000	65,000	65,000	48" dia. x 17" h	320 lbs
Legend Round (586)	65,000	32,000	60,000	60,000	48" dia. x 15" h	200 lbs
Cosmopolitan Round (645)	65,000	32,000	60,000	60,000	48" dia. x 24" h	210 lbs
32" Chat Fire Bowl (735)	65,000	65,000	60,000	60,000	32" dia. x 15" h	170 lbs
36" Chat Fire Bowl (736)	65,000	65,000	60,000	60,000	36" dia. x 16 1/2" h	200 lbs
48" Chat Fire Bowl (738)	65,000	65,000	60,000	60,000	48" dia. x 23" h	400 lbs
Fiesta (770)	n/a	n/a	60,000	60,000	54" dia. x 25" h	280 lbs
Fiesta Dining (775)	n/a	n/a	60,000	60,000	54" dia. x 28" h	290 lbs
Contempo Round (782)	65,000	32,000	60,000	60,000	47" dia. x 15 1/2" h	200 lbs
River Rectangle (460)	75,000	32,000	65,000	65,000	70 1/2" w x 35" x 18" h	420 lbs
Iron Saddle Rectangle (580)	75,000	32,000	65,000	65,000	37 1/2" w x 60" d x 16 1/2" h	380 lbs
Iron Saddle Long Rectangle (588)	100,000	54,000	65,000	65,000	72" w x 36" d x 16 1/2" h	390 lbs
Legend Series Rectangle (581)	75,000	32,000	65,000	65,000	36" w x 60" d x 14 1/2" h	300 lbs
Legend L.P. Select (585)	n/a	n/a	n/a	65,000	60" w x 36" d x 20" h	420 lbs
Legend Long L.P. Select (587)	n/a	n/a	n/a	65,000	72" w x 36" d x 20" h	490 lbs
Legend Series Long Rectangle (589)	100,000	54,000	65,000	65,000	72" w x 36" d x 14 1/2" h	320 lbs
Cosmopolitan Rectangle (635)	65,000	33,000	60,000	60,000	54" w x 36" d x 24" h	220 lbs
Cosmopolitan Square (640)	65,000	32,000	60,000	60,000	36" w x 36" d x 24" h	160 lbs
Cosmopolitan Square Dining (642)	75,000	32,000	65,000	65,000	60" w x 60" d x 29" h	360 lbs
Voro (725)	n/a	n/a	60,000	60,000	36" w x 36" d x 24" h	190 lbs
Voro Cube (726)	n/a	n/a	60,000	60,000	26" w x 26" d x 23" h	170 lbs
Contempo Rectangle (783)	65,000	33,000	60,000	60,000	52" w x 36" d x 15 1/2" h	230 lbs
Contempo Square (784)	65,000	32,000	60,000	60,000	44" w x 44" d x 15 1/2" h	230 lbs
Contempo L.P. Select (785)	n/a	n/a	n/a	60,000	52" w x 36" d x 18 1/2" h	270 lbs
Contempo Long L.P. Select (788)	n/a	n/a	n/a	65,000	76" w x 36" d x 18 1/2" h	430 lbs

Table 1 - Product Specifications

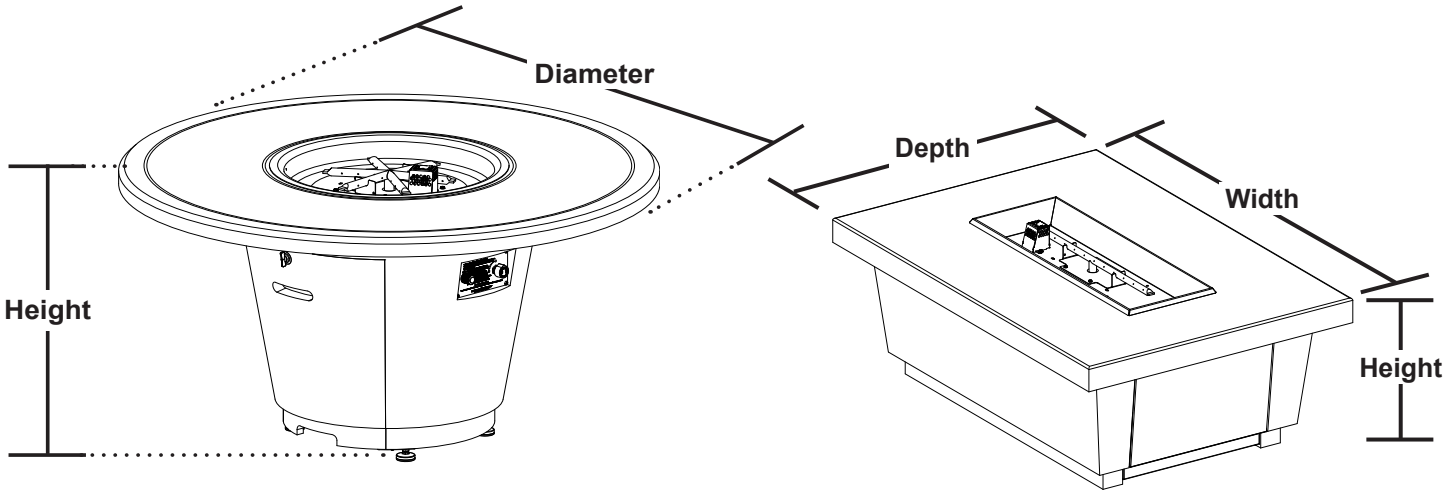

Only the American Fyre Designs decorative media options listed below are approved for use with this product. Follow the recommendations for media amounts. All decorative media options are purchased separately; contact your local American Fyre Designs dealer when ordering.

REQUIRED BASE MEDIA

Lava granules (included with burner) **MUST** first be placed to fill the burner area. Use the bag labeled "REQUIRED BASE MEDIA" included with your unit.

REQUIRED PRIMARY MEDIA OPTIONS

IF LAVA GRANULES ARE DESIRED FOR USE AS PRIMARY MEDIA, ALL THE REQUIRED MEDIA IS INCLUDED. Place the remaining bags of granules labled "PRIMARY GRANULE MEDIA".

If not using the included granules as primary media: Additional decorative media such lava / glass / gems (purchased separately) **MUST** then be placed to cover the burner.

When using lava media:

Style	Recommended Amount of Granules / Coals
Iron Saddle Rectangle (580), Legend Series Rectangle (581), Legend L.P. Select (585), Legend Round (586), Cosmopolitan Rectangle (635), Cosmopolitan Square (640), Cosmopolitan Round (645), Voro (725), Voro Cube (726), 32" Chat Fire Bowl (735), 36" Chat Fire Bowl (736), 48" Chat Fire Bowl (738), Contempo Round (782), Contempo Rectangle (783), Contempo Square (784), Contempo L.P. Select (785)	10 lbs
Meadow Round (450), River Rectangle (460), Legend Long L.P. Select (587), Fiesta (770), Fiesta Dining (775)	15 lbs
Iron Saddle Long Rectangle (588), Legend Series Long Rectangle (589), Cosmopolitan Square Dining (642), Contempo Long L.P. Select (788)	25 lbs

Table 2 - Lava Recommendations

When using glass media:

Style	Recommended Amount of Glass / Gems
Cosmopolitan Rectangle (635), Cosmopolitan Square (640), Voro (725), Voro Cube (726), Contempo Rectangle (783), Contempo Square (784), Contempo L.P. Select (785)	10 lbs
Legend L.P. Select (585)	15 lbs
Legend Round (586), 32" Chat Fire Bowl (735), 36" Chat Fire Bowl (736), 48" Chat Fire Bowl (738), Cosmopolitan Round (645), Fiesta (770), Fiesta Dining (775), Contempo Round (782)	20 lbs
Iron Saddle Rectangle (580), Legend Series Rectangle (581), Legend Long L.P. Select (587)	25 lbs
Meadow Round (450), River Rectangle (460)	30 lbs
Iron Saddle Long Rectangle (588), Legend Series Long Rectangle (589), Cosmopolitan Square Dining (642), Contempo Long L.P. Select (788)	40 lbs

Table 3 - Glass Recommendations

SECONDARY MEDIA OPTIONS (optional)

Secondary options such as lava stones / river stones / creekstones / fyre spheres / wood chunks / glass nuggets (purchased separately) may also be placed on top of the lava or glass media.

Lava Stones Information

- If option is chosen, use LVS-15 (15 lbs)
- **Not for use when an L.P. Cylinder is installed within the unit.**

Description	H Models	M Models	Specification	Qty.
Igniter battery type		X	AA battery	1
USB Triple Fast-Charging Outlet	X		3.0 USB-A (X2), USB-C MAX 12VDC/ MIN 5VDC output	1
Input electrical requirements	X		120VAC / 15 AMP minimum / 60 Hz / GFCI outlet	-
Operating temperature	X		0-125C (32F - 257F)	-
Bluetooth broadcast range	X		up to 10m / 30ft (line of sight)	-
Communications protocol	X		Bluetooth 4.0 LE	-

Table 4 - Technical Data

H MODELS WIRING DIAGRAM

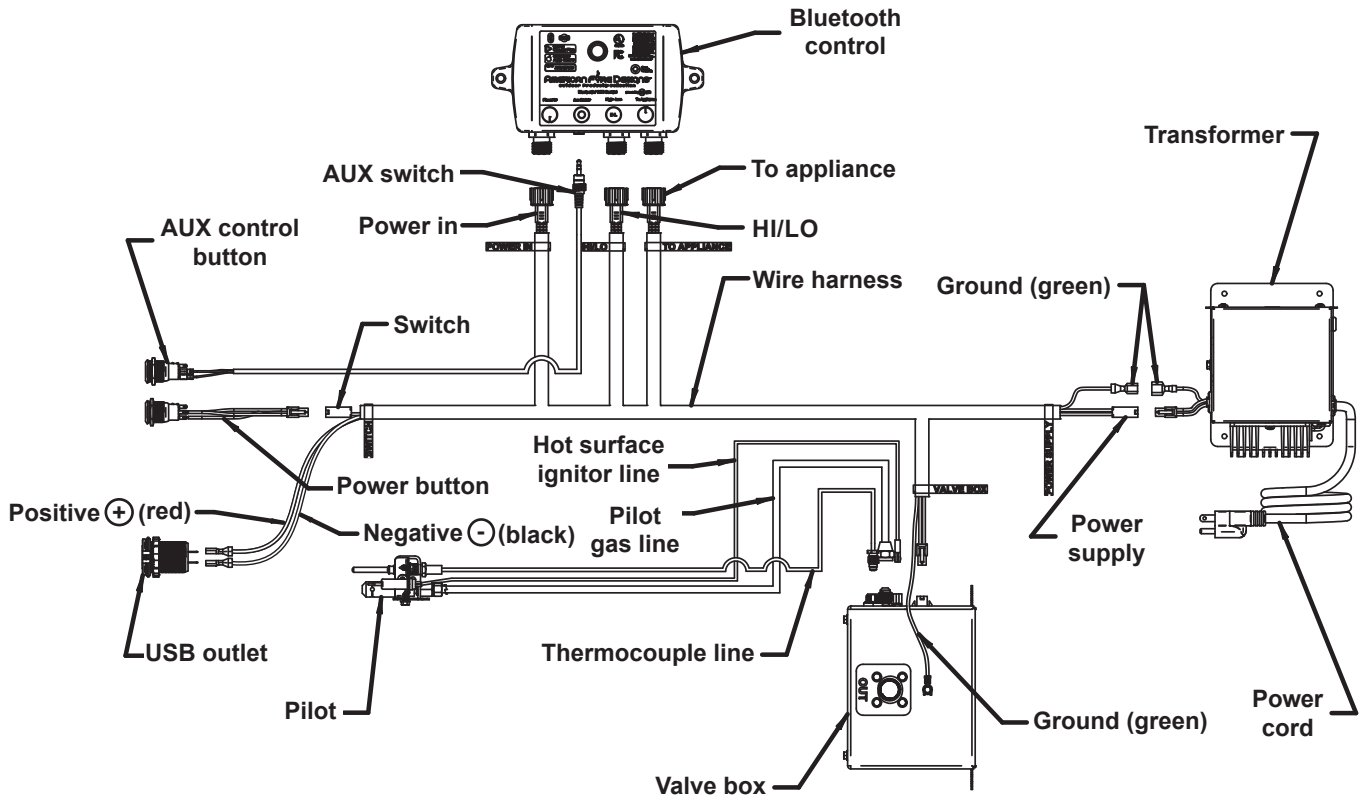

For HI/LO Fyrestarter (H) Models:

For all information and videos related to specifications, app setup, and operation, refer to the Fyrestarter bluetooth control web page. See below.

Visit www.americanfyredesigns.com/fyrestarter/ or simply scan the QR code on the right.

- To scan, use your smartphone, open the camera app, and position your camera over the QR code. Then follow any prompts to access the link.
- A QR code scan app may need to be installed if your camera is not already setup to scan QR codes.

PROPANE CYLINDER ENCLOSURE REQUIREMENTS (IF APPLICABLE)

If a propane cylinder is being used as the gas source, and the unit does not accommodate a cylinder, a separate propane cylinder enclosure is required. See the following information.

American Fyre Designs tank/end tables are available. They meet all propane cylinder enclosure and ventilation requirements. Contact your local dealer. For requirements regarding custom-built cylinder enclosures, see below.

To ensure proper operation and safety the propane cylinder enclosure MUST comply with the following:

- Proper construction - see PROPANE CYLINDER ENCLOSURE PARAMETERS section.
- Proper ventilation and drainage - see PROPANE CYLINDER ENCLOSURE VENTILATION AND DRAINAGE section.
- Proper clearances from combustibles - see MINIMUM CLEARANCES section.

You MUST read and follow these sections for complete propane cylinder enclosure requirement details.

PROPANE CYLINDER ENCLOSURE PARAMETERS

The cylinder enclosure can be constructed according to your individual preference, while following all guidelines found in this manual. **The enclosure MUST (see Fig. 17-1):**

- be installed in a safe location and on a hard and level surface
- be constructed of non-combustible materials
- be properly vented, and provide for water drainage (see PROPANE CYLINDER ENCLOSURE VENTILATION AND DRAINAGE section)
- have minimum dimensions as illustrated in Fig. 17-1
- use an L.P. regulator hose assembly (not included) to connect the unit to the propane cylinder:
  - Single stage: maximum BTU capacity 95k / 2 stage: maximum BTU capacity 150k
  - above ground
  - maximum 10 feet in length
  - propane extension hoses are available from American Fyre Design. Contact your local dealer for ordering information.
- provide a 1" x 1" minimum cutout for the hose assembly
- be constructed so that the cylinder is properly secured, and sits at least 2" above the floor (use mechanical means to secure the cylinder to prevent it from tipping over - see below for an example)

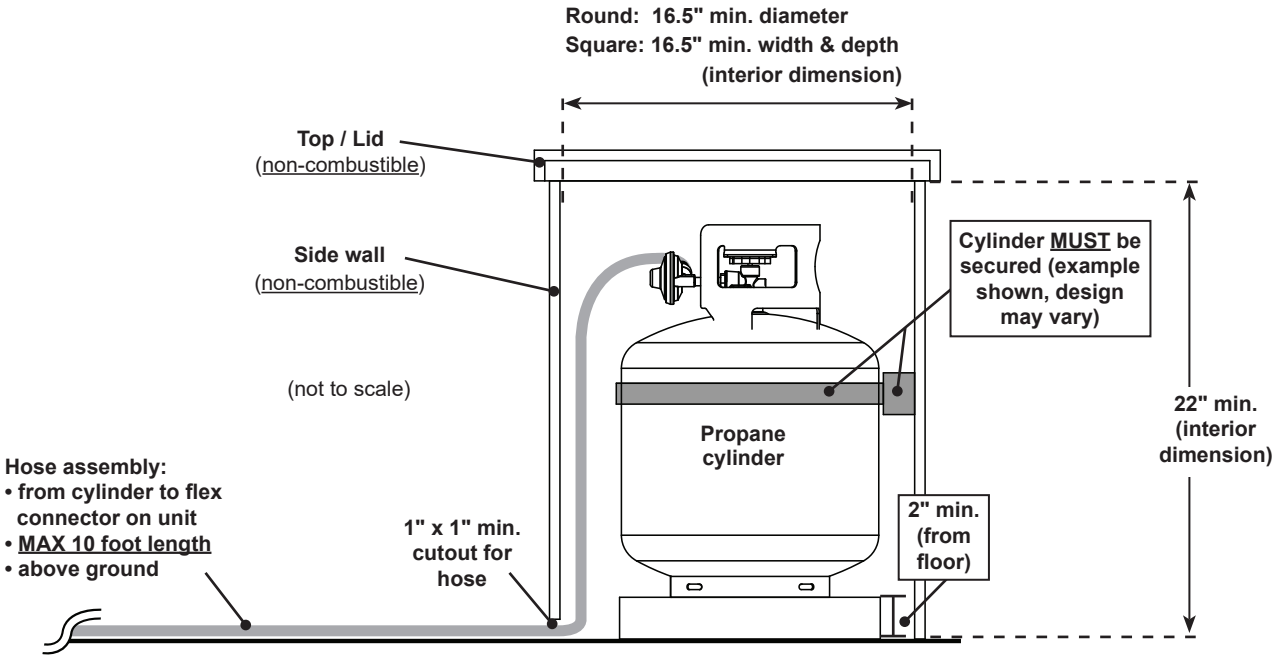

Fig. 17-1 Propane cylinder enclosure specifications (side view)

PROPANE CYLINDER ENCLOSURE VENTILATION AND DRAINAGE

FOR YOUR SAFETY, you must provide the openings listed below for replacement air and ventilation of the enclosure (in case of possible leakage from gas connections or propane cylinders). Failure to do so may result in a fire or explosion causing property damage, bodily injury, or death. The openings also allow for water drainage.

Ventilation

One side of the enclosure shall be left completely open to the outside; OR 4 (minimum) ventilation openings MUST be created (reference Fig. 18-1 and Fig. 18-2):

- **Each opening must have a minimum of 10 sq. in. of free area. The openings must be equally sized. (Total of 40 sq. in. free area.)**
- Two openings must be in the side walls of the enclosure, at the top level, and spaced at a minimum of 90 degrees. The openings must begin 1" or less below the top level and end no more than 5" below the top level.
- Two openings must be in the side walls of the enclosure, at the floor level, and spaced at a minimum of 90 degrees. The openings must begin 1" or less above the floor level and end no more than 5" above floor level.
- **The openings must remain unobstructed:**

  The clearance between the openings and any items outside of the enclosure is a minimum of 6". The clearance between the openings and cylinder within the enclosure is a minimum of **2"**. See Fig. 18-2.

It is acceptable to use RHP venting panels (PN 5510-01). Contact your dealer.

Water Drainage

Two additional openings (1" x 4") must be created at the floor level (and spaced at 180 degrees) to allow for water drainage. The openings must be equally sized and unobstructed. See Fig. 18-2.

KEEP THE REQUIRED VENT OPENINGS, DRAIN OPENINGS, AND SURROUNDING AREA OF THE ENCLOSURE CLEAR AND FREE AT ALL TIMES.

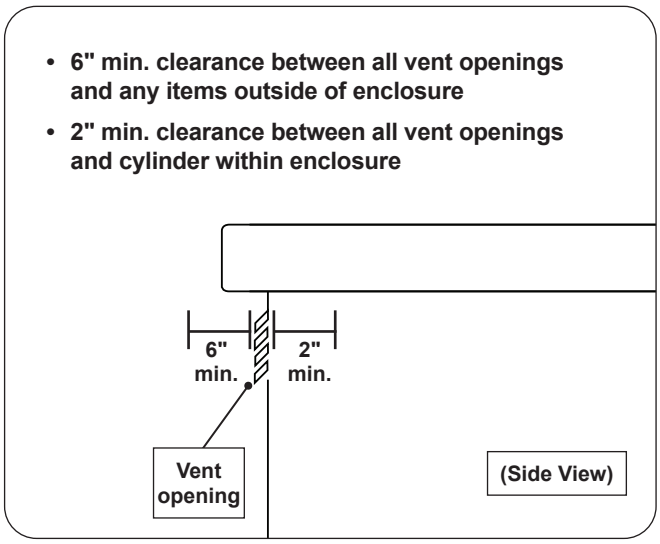

Fig. 18-1 Vent openings clearance

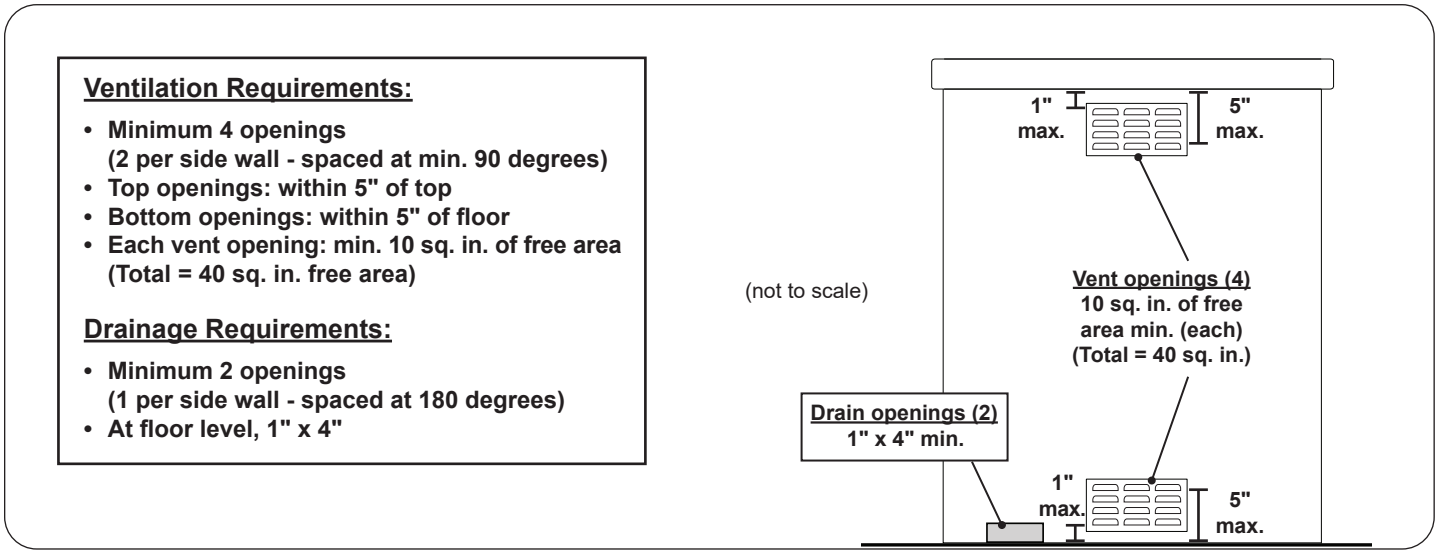

Fig. 18-2 Ventilation and drainage specifications (propane cylinder enclosure side view)

MINIMUM CLEARANCES

The dimensions shown below are **MINIMUM CLEARANCES** to maintain when you install the unit.

ALL CLEARANCES AND INFORMATION STATED HERE MUST BE MAINTAINED AND FOLLOWED.

Note: Over time sooting may occur on the ceiling above the unit (if applicable).

Description	Dimension	
	Firetable Unit	Propane Cylinder Enclosure (if applicable)
Side clearance (from unit edge to any construction)	3 ft	6"
Clearance above unit (from unit top to any construction)	6 ft	0"
Clearance below unit	0"	0"

Table 5 - Minimum Clearances

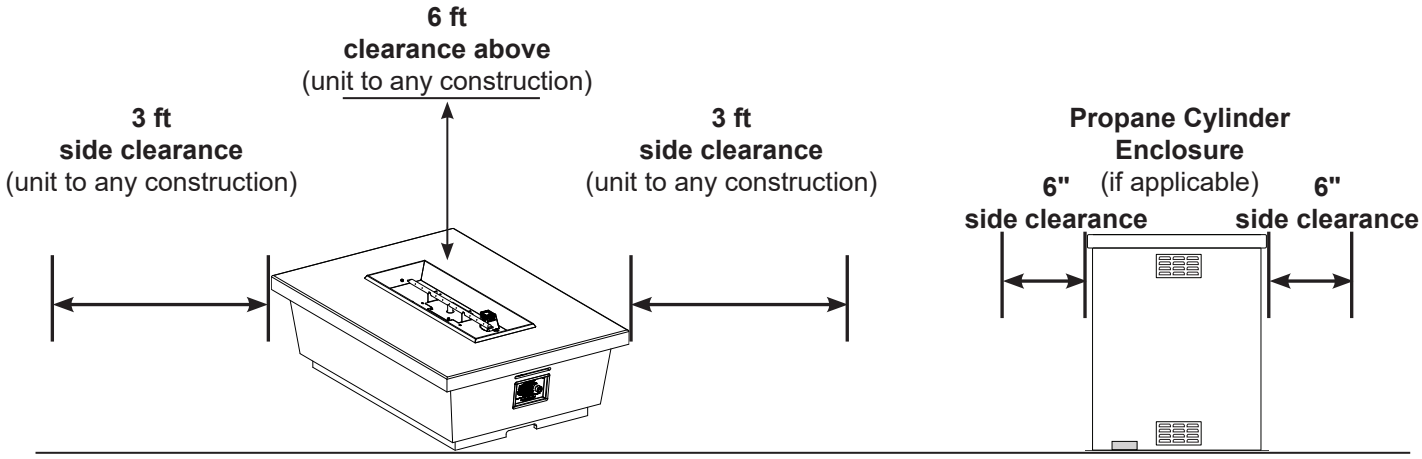

Floor must be a hard, level surface. Combustible materials permitted.

TOOLS REQUIRED

The following are the minimum tools required for the installation of your unit. Additional tools may be required for your individual installation.

- 2 (or more) assemblers recommended
- appropriate tools for gas supply and electrical install
- appropriate tools for propane cylinder enclosure construction (if applicable)
- cordless drill
- Phillips screwdriver
- flathead screwdriver
- $^{1}/_{2}$" open-end wrenches (2) (or equivalent)
- $^{3}/_{8}$", $^{7}/_{16}$", & $^{9}/_{16}$" open-end wrenches (or equivalent)
- drill drivers
- $^{5}/_{16}$" nut driver (or equivalent)
- 20mm socket (or equivalent)

PARTS LIST

- In addition to the appropriate Common Replacement Parts List, reference the appropriate Identification Parts List.
- Decorative media is purchased and packaged separately. Various styles are available.
- Your unit is packaged onto 1 pallet.
- Decorative media and replacement parts can be ordered from your local American Fyre Designs dealer.
- Select models are illustrated (your model may vary)

IMPORTANT

Remove all packing material (including any protective coatings) and discard prior to use.

SOME COMPONENTS ARE HEAVY

HANDLE WITH CARE

COMMON REPLACEMENT PARTS LIST - FIRETABLE M2 / M4 / M6 MANUAL FLAME SENSING CONTROL MODELS (450, 586, 635, 640, 642, 645, 725, 726, 735, 736, 738, 770, 775, 782, 783, 784, 785 models)

Item	Description	Part No.	Qty.
1.	12" star burner, only	OBS-12	1
or	16" star burner, only	OBS-16	1
or	24" linear straight burner, only	OBL-24	1
2.	Black round burner pan	88-BPC-20A	1
or	Black square burner pan (16")	88-BPS-16A	1
or	Black square burner pan (28")	88-BPS-28A	1
or	Black rectangular burner pan	88-BPR-32A	1
3.	12" round burner plate *	OBP-12A	1
or	16" round burner plate *	OBP-16A	1
4.	12" star burner / 24" linear straight burner orifice (Nat.)	14226-25	1
or	16" star burner orifice (Nat.) †	14226-22	1
or	12" star burner / 24" linear straight burner orifice (L.P.)	14225-42	1
or	16" star burner orifice (L.P.) †	14225-40	1
5.	Control valve w/ knob and adapters	AV-38	1
6.	Control knob (only)	KNOB-7	1
7.	Igniter module ‡	OCR-34-21	1
8.	Igniter electrode wire	WI-31	1

Item	Description	Part No.	Qty.
9.	Igniter electrode	4732-061	1
10.	Pressure regulator (All Nat. models & select L.P. models, see ▲ icon below)	PR-4	1
11.	Flex connector (All Nat. models & select L.P. models, see ▲ icon below)	3035	1
or	24" L.P. regulator and hose assembly	5110-07	1
or	24" 2-Stage L.P. regulator and hose assembly ●	5110-15	1
or	36" L.P. regulator and hose assembly ♦	5110-27	1
or	5' 2-Stage L.P. regulator and hose assembly ►	5110-29	1
12.	10' L.P. regulator and hose assembly ■	5110-26	1
13.	Thermocouple	SV-30-1	1
14.	Igniter screen	THS-2	1
15.	Lava granules, 10 lb (M4 & M6 models) (base media)	LF-10	1
or	Lava granules, 5 lb (M2 models) (base media)	LF-5	1

* if applicable
† 450 & 642 models only
‡ when purchasing Item 7, Item 8 must also be purchased
▲ for 586, 782, 783, & 784 models, also use for L.P.
● 785 L.P. models only
♦ 635 L.P. models only
■ 450, 586, 782, 783, & 784 L.P. models only
► 738 L.P. models only

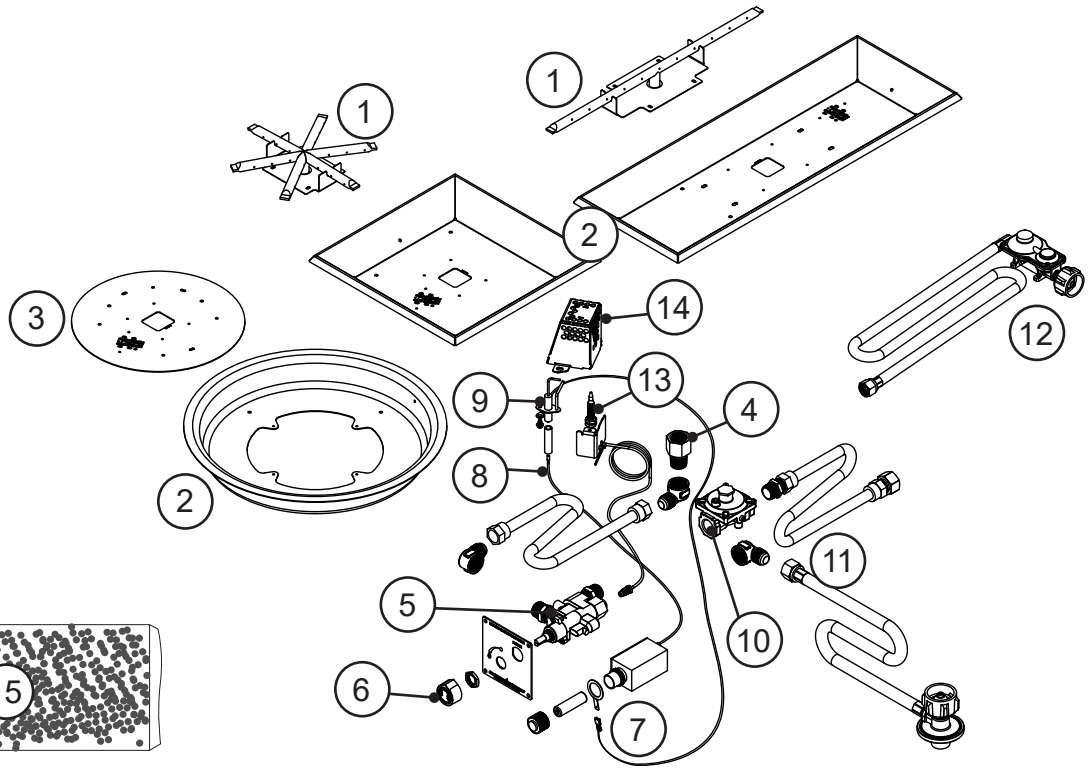

Configuration shown may slightly vary from that of your model

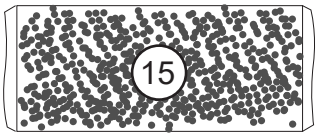

COMMON REPLACEMENT PARTS LIST - FIRETABLE M7/M8 MANUAL FLAME SENSING CONTROL MODELS (460, 580, 581, 585, 587, 588, 589, 788 models)

Item	Description	Part No.	Qty.
1. or	18" linear straight burner, only 24" linear straight burner, only	OBT-18A OBL-24	2 2
2. or or or	36" rectangular burner pan 36" rectangular deep-set burner pan 48" rectangular burner plate 48" rectangular deep-set burner pan	BPR-36P-MA BPR-36P-DMA BPR-48-MA BPR-48P-DMA	1 1 1 1
3. or	Orifice (Nat.) Orifice (L.P.)	14226-33 14225-50	2 2
4.	Control valve w/ knob and adapters	AV-38	1
5.	Control knob (only)	KNOB-7	1
6.	Igniter module *	OCR-34-21	1
7.	Igniter electrode wire	WI-31	1
8.	Igniter electrode	4732-061	1
9.	Convertible regulator	PR-4	1
10.	Flex connector	CK-5-24SP	1
11. or	10' L.P. regulator and hose assembly 24" 2-Stage L.P. regulator and hose assembly †	5110-26 5110-15	1 1
12.	Thermocouple	SV-30-1	1
13.	Igniter screen	THS-2	1
14.	Lava granules (base media)	LF-10	1

* when purchasing Item 6, Item 7 must also be purchased
† 788 L.P. models only

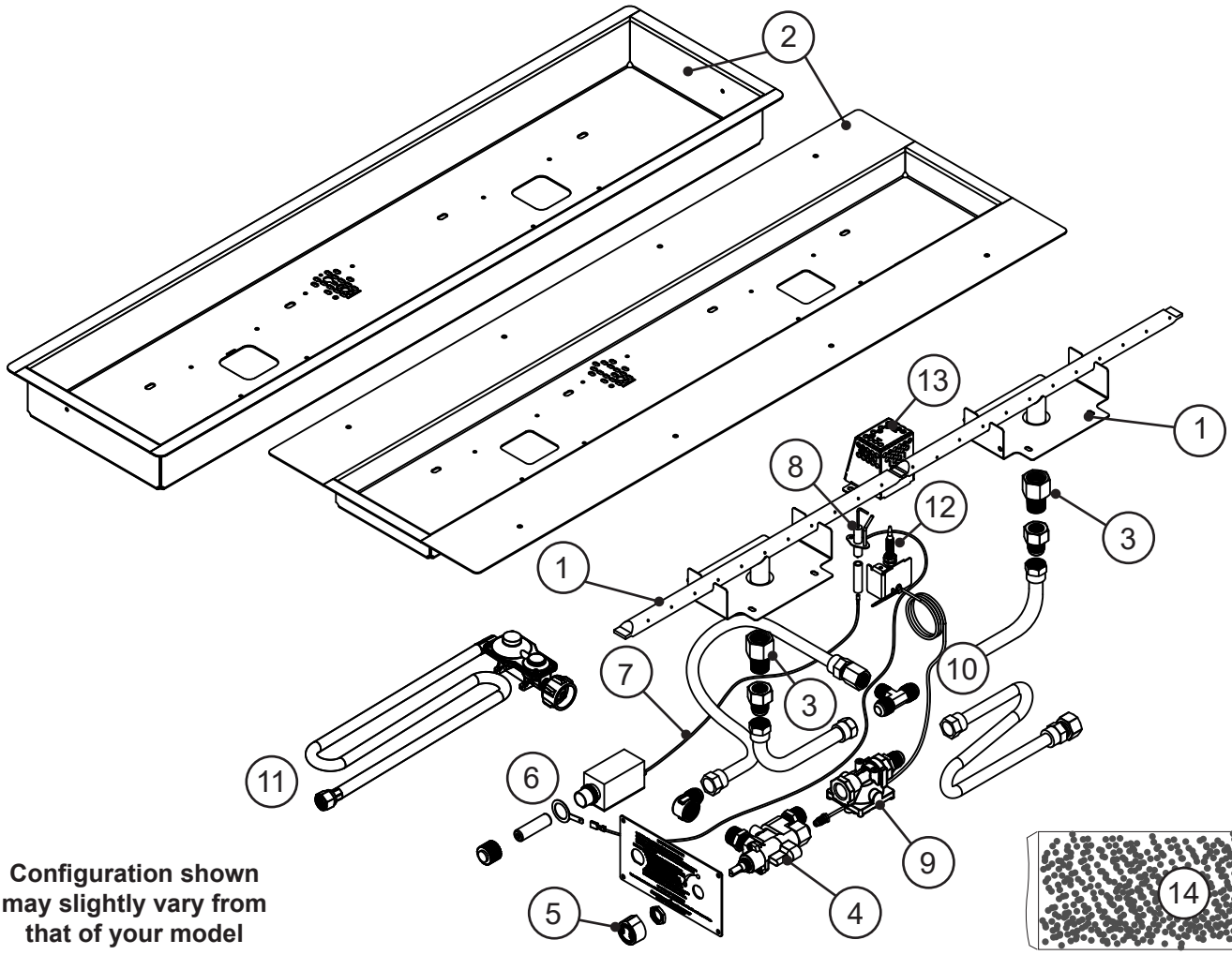

Configuration shown may slightly vary from that of your model

COMMON REPLACEMENT PARTS LIST - FIRETABLE H2 / H4 / H6 FYRESTARTER MODELS (450, 586, 635, 640, 642, 645, 735, 736, 738, 782, 783, 784 models)

Item	Description	Part No.	Qty.
1.	12" star burner, only	OBS-12	1
or	16" star burner, only	OBS-16	1
or	24" linear straight burner, only	OBL-24	1
2.	Black round burner pan	88-BPC-20	1
or	Black square burner pan (16")	88-BPS-16-07	1
or	Black square burner pan (28")	88-BPS-28-07	1
or	Black rectangular burner pan	88-BPR-32-07	1
3.	12" round burner plate *	OBP-12-07	1
or	16" round burner plate *	OBP-16-07	1
4.	Nat. orifice	14226-22	1
or	Nat. orifice ♥	14226-10	1
or	Nat. orifice †	14226-18	1
or	L.P. orifice	14225-40	1
or	L.P. orifice ♥	14225-31	1
or	L.P. orifice †	14225-36	1
5.	Pilot assembly (Nat.)	PAC-21	1
or	Pilot assembly (L.P.)	PAC-21P	1
6.	Pilot orifice (Nat.)	14281	1
or	Pilot orifice (L.P.)	14282	1
7.	Thermocouple	TH-3	1
8.	Hot surface igniter	HSI-1	1

Item	Description	Part No.	Qty.
9.	Transformer box assembly	783-701A	1
10.	Valve box assembly (Nat.)	731-702-34	1
or	Valve box assembly (L.P.)	731-702-51	1
11.	Bluetooth control box assembly	AFD-BTWR	1
12.	Power button	SW-15	1
13.	AUX control button	ASW-1	1
14.	USB outlet	USB-1	1
15.	Flex connector (All Nat. models & select L.P. models, see ‡ icon below)	CK-5-24SP	1
or	24" L.P. regulator and hose assembly	5110-07	1
or	36" L.P. regulator and hose assembly ▲	5110-27	1
or	5' 2-Stage L.P. regulator and hose assembly ►	5110-29	1
16.	10' L.P. regulator and hose assembly ●	5110-26	1
17.	Convertible regulator (All Nat. models & select L.P. models, see ‡ icon below)	PR-4	1
18.	Lava granules, 10 lb (H4 & H6 models) (base media)	LF-10	1
or	Lava granules, 5 lb (H2 models) (base media)	LF-5	1

* if applicable
♥ 450 models only
† 642 models only
‡ for 586, 782, 783, & 784 models, also use for L.P.
▲ 635 and 642 L.P. models only
● 450, 586, 782, 783, & 784 L.P. models only
► 738 L.P. models only

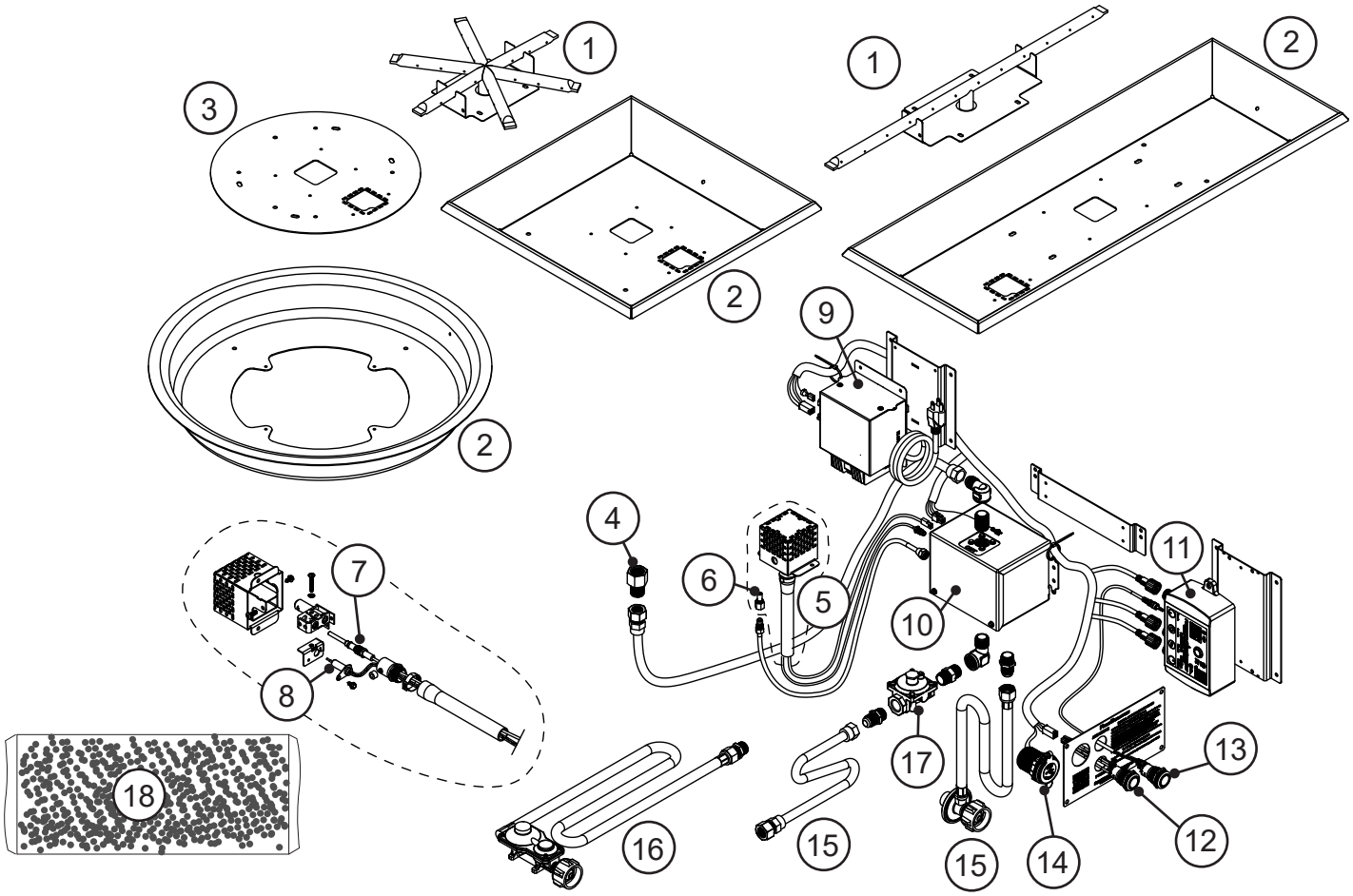

Configuration shown may slightly vary from that of your model

COMMON REPLACEMENT PARTS LIST - FIRETABLE H7/H8 FYRESTARTER MODELS (460, 580, 581, 588, 589 models)

Item	Description	Part No.	Qty.
1.	18" linear straight burner, only	OBT-18A	2
or	24" linear straight burner, only	OBL-24	2
2.	36" rectangular burner deep-set pan	BPR-36P-D07	1
or	36" rectangular burner pan	BPR-36P-07	1
or	48" rectangular burner plate	BPR-48-07	1
3.	18" burner orifice (Nat.)	14226-31	2
or	18" burner orifice (L.P.)	14225-48	2
or	24" burner orifice (Nat.)	14226-25	2
or	24" burner orifice (L.P.)	14225-43	2
4.	Pilot assembly (Nat.)	PAC-21	1
or	Pilot assembly (L.P.)	PAC-21P	1
5.	Pilot orifice (Nat.)	14281	1
or	Pilot orifice (L.P.)	14282	1
6.	Thermocouple	TH-3	1
7.	Hot surface ignitor	HSI-1	1
8.	Transformer box assembly	783-701A	1
9.	Valve box assembly (Nat.)	731-702-34	1
or	Valve box assembly (L.P.)	731-702-51	1
10.	Bluetooth control box assembly	AFD-BTWR	1
11.	Power button	SW-15	1
12.	AUX control button	ASW-1	1
13.	USB outlet	USB-1	1
14.	Flex connector	CK-5-24SP	1
15.	10' L.P. regulator and hose assembly (L.P. models only)	5110-26	1
16.	Convertible regulator	PR-4	1
17.	Lava granules (base media)	LF-10	1

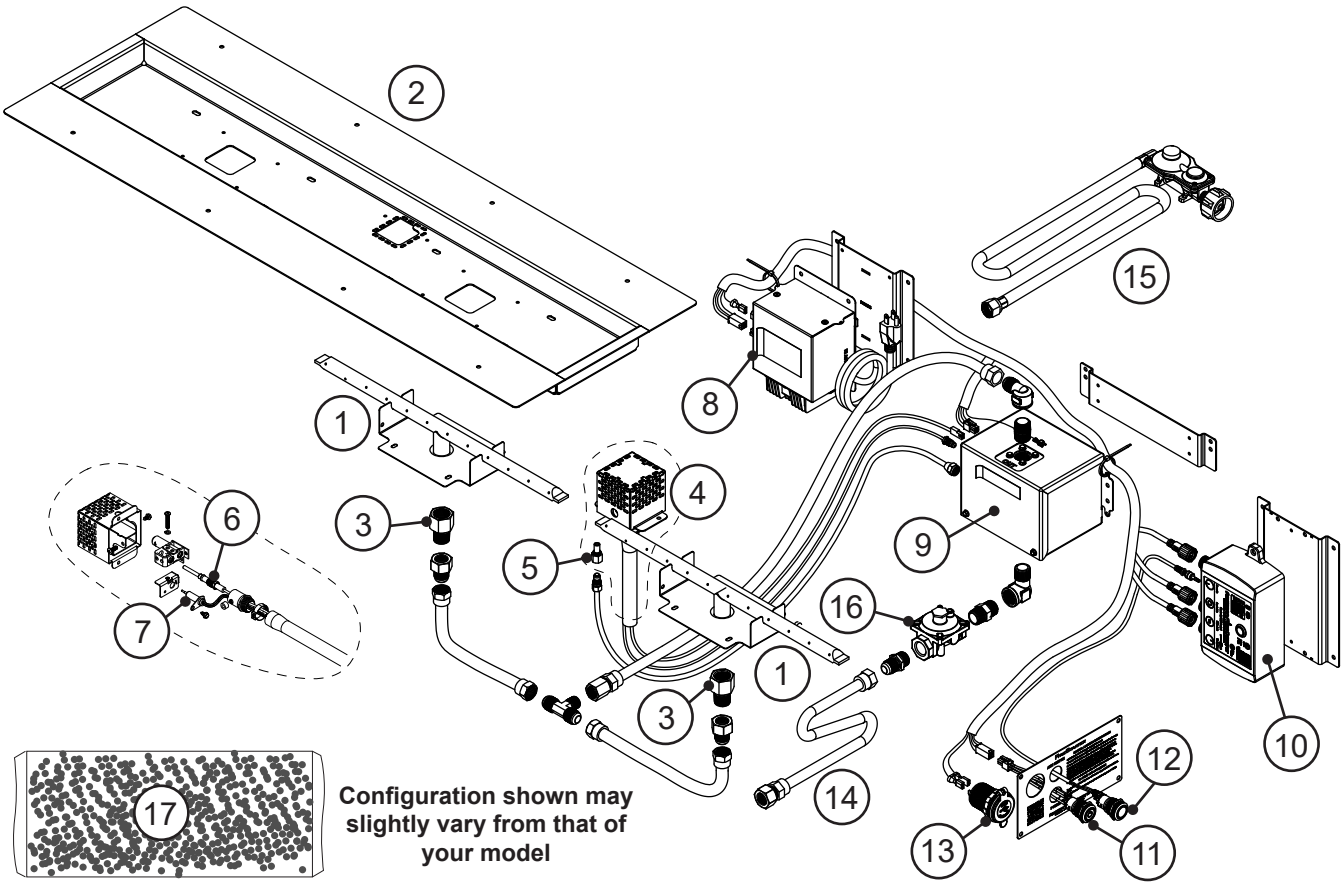

Configuration shown may slightly vary from that of your model

IDENTIFICATION PARTS LIST

735, 736 model

Item	Description	Qty.
1.	Complete enclosure assembly	1
2.	Burner assembly	1
3.	GFRC cover	1
4.	Control panel	1

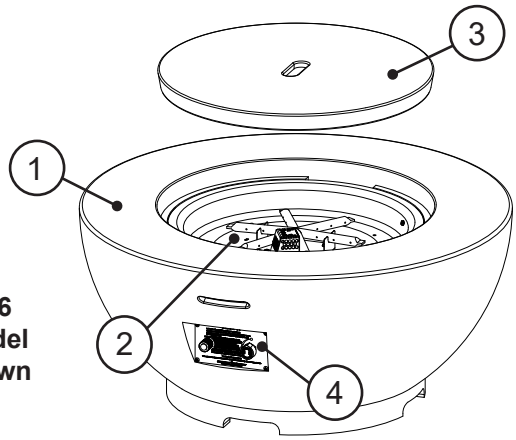

736 model shown

460, 581, 585, 586, 587, 589, 726, 782, 783, 784, 785, 788 models

Item	Description	Qty.
1.	Complete enclosure assembly	1
2.	Burner assembly	1
3.	Base door/drawer *	1
4.	GFRC cover *	1
5.	Control panel †	1

* if equipped
† design will vary by model

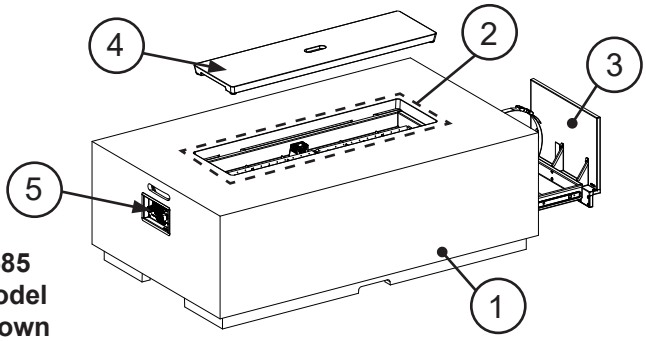

585 model shown

635, 640, 642, 645, 725 models

Item	Description	Qty.
1.	Top	1
2.	Base	1
3.	Base door (if equipped)	1
4.	Burner assembly	1
5.	Support bracket w/ hardware kit * †	1
6.	Decorative metal panel * ‡	1
7.	Control panel ▲	1

* not shown
† kit contains: (2) 1/4"-20 x 2" bolts, (2) nuts, (4) washers, (1) brackets
‡ nest models only
▲ design will vary by model

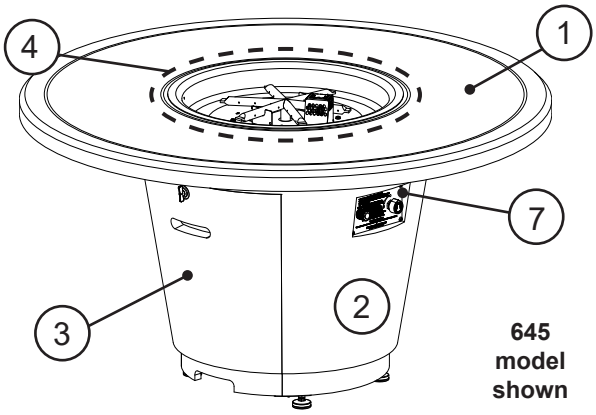

645 model shown

IDENTIFICATION PARTS LIST (cont.)

738 models

Item	Description	Qty.
1.	Complete enclosure assembly	1
2.	Enclosure door	1
3.	Burner assembly	1
4.	GFRC cover	1
5.	Control panel	1
6.	Base drawer *	1

* if equipped

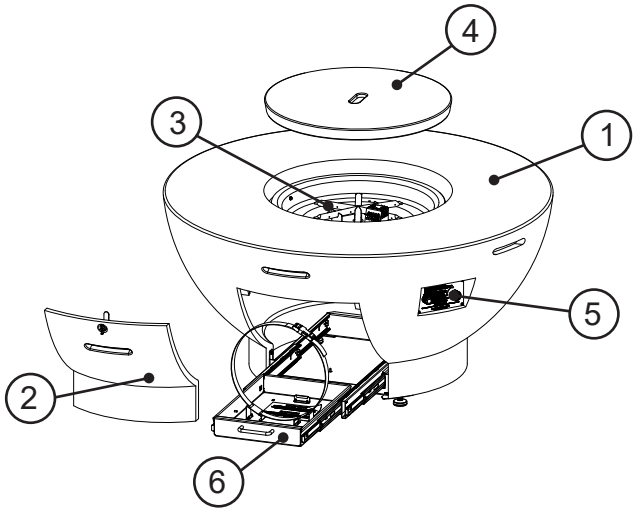

770, 775 models

Item	Description	Qty.
1.	Top	1
2.	Base	1
3.	Base door *	1
4.	Base bottom	1
5.	Burner assembly	1
6.	Hardware kit * †	1
7.	Control panel ‡	1

* not shown
† kit contains: (3) 1/4"-20 x 3" bolts, (3) nuts, (3) washers
(3) 1/4" x 1 3/4" concrete screws
‡ design will vary by model

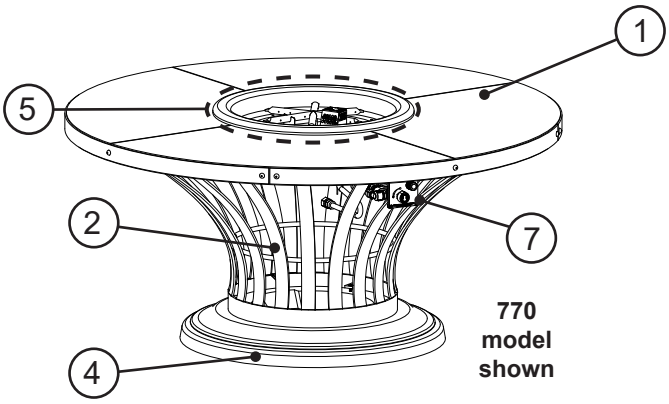

580, 588 models

Item	Description	Qty.
1.	Base	1
2.	Burner assembly	1
3.	Frame	1
4.	Control panel †	1
5.	GFRC cover *	1

* if equipped
† design will vary by model

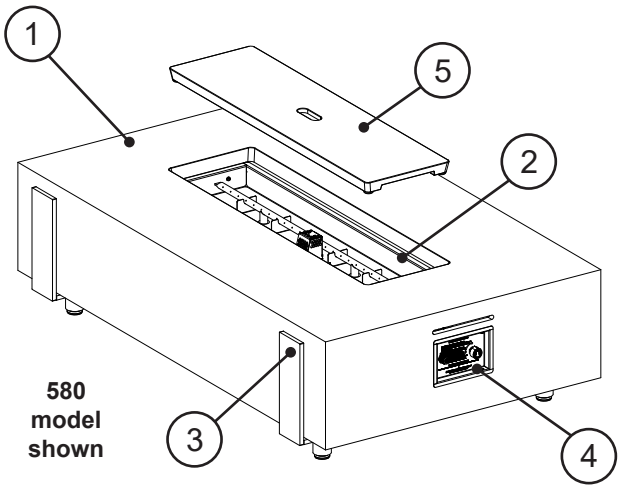

450 model

Item	Description	Qty.
1.	Base	1
2.	Burner assembly	1
3.	Refractory panel	1
4.	Control panel *	1

* design will vary by model

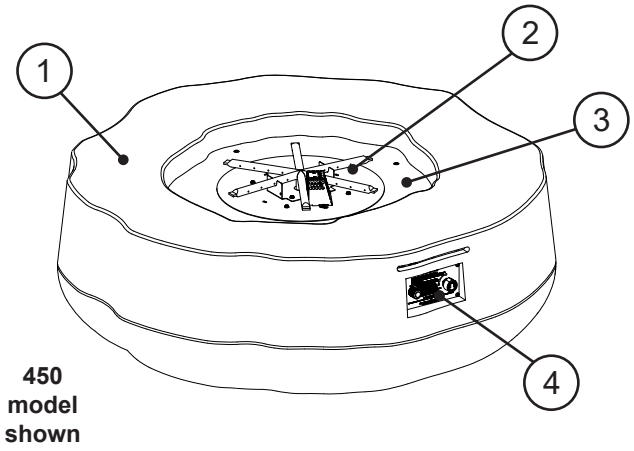

IMPORTANT SAFETY INFORMATION

BE CAREFUL

If not installed and used correctly per these instructions, this product can cause serious injury.

CAUTION: Installation and maintenance must be done by an NFI Certified or other qualified professional service technician. Read these instructions before installing this unit. Be sure you understand all safety precautions and warnings contained in this manual.

A. FOR OUTDOOR USE ONLY.

B. When shutting the unit down—be sure to **TURN THE CONTROL VALVE FULLY OFF.**

C. WARNING: CARBON MONOXIDE POISONING MAY LEAD TO DEATH. DO NOT MODIFY THIS UNIT OR ITS CONTROLS, EXCEPT AS PROVIDED FOR IN THIS MANUAL. Any other change may be dangerous. Improper installation or use of the unit can cause serious injury or death from fire, burns, explosions, or carbon monoxide poisoning.

D. Check state and local codes to determine if the unit is permitted in your locality before installation.

E. Select models allow for an adjustable flame height. THESE SETTINGS MUST ALWAYS BE HIGH ENOUGH FOR THE FLAME TO BE CLEARLY VISIBLE. WHEN LIGHTING THE UNIT, ALWAYS LIGHT ON HIGH.

INSTALLATION

BEFORE YOU BEGIN

Important: Prior to installation ensure that all specifications, dimensions, propane cylinder enclosure requirements (if applicable), and minimum clearances stated in this manual are observed. You must read all warnings and safety information, and understand all of the information in this manual. All installation requirements must be observed and met.

WARNING: Failure to position the parts in accordance with these diagrams or failure to use only parts specifically approved with this appliance may result in property damage or personal injury.

- Confirm the installation site accommodates the unit per the requirements in this manual.
- Be sure the gas supply (propane or natural) is turned off at its source.
- **Wear gloves and use extreme caution whenever installing and handling this product and its accessories as certain components have sharp edges that can cause personal injury.**
- Remove all packing material (including any protective coatings) and discard prior to installation.

LOCATION

While following all requirements and safety information in this manual (see MINIMUM CLEARANCES section); determine and prepare the location of the unit (a hard and level surface).

Note: A combustible surface is permitted.

Important: The gas supply and electrical setup must be considered when determining the location of the unit. See GAS SUPPLY SETUP and ELECTRICAL SETUP section for details (as applicable).

ASSEMBLY REQUIRES TWO OR MORE PEOPLE.

EXERCISE EXTREME CARE DURING ASSEMBLY AND INSTALLATION.

GAS SUPPLY SETUP (if applicable)

For Natural or Household Propane Gas Supply:

The gas supply is to be brought up from beneath the unit near its center. Your individual installation may vary. **Observe the National Fuel Gas Code (NFPA 54) and all local codes, and leak test at all connections.**

1. Ensure the gas supply is properly routed into the area that the unit will rest over (see Fig. 27-1, A).

Note: The gas supply or another flex can also be routed through the side of the unit (through a ventilation opening at the floor).

Important: Locate the gas supply line out of pathways where people may trip over it or in areas where the line may be subject to accidental damage (if applicable).

Note: A shut-off valve (not included) in the gas line is required. It must be installed within 6 feet of the unit and must be easily accessible. Use a pipe joint compound resistant to all gasses on all NPT fittings **except flare fittings**. Refer to the NFPA 54 guidelines for all details.

ELECTRICAL SETUP (if applicable)

A **120VAC (15 AMP minimum) GFCI GROUNDED 3-wire receptacle** (not included) is required within the vicinity of the firetable to provide power to the unit. The GFCI receptacle must be a WEATHER-PROOF IN-USE COVERED RECEPTACLE. The unit's power supply cord is located on the rear of the valve box. Your individual installation may vary. **Observe the National Electric Code and all local codes.**

1. Wire the receptacle into the area that the unit will rest over (see Fig 27-1, B).
   - **Verify proper polarity of the receptacle.**
   - **If an extension cord is used, ensure it is a 3-wire GROUNDED cord that is rated for the power of the equipment, and is approved for outdoor use with a W-A marking. DO NOT use 2-prong adapters.**
   - **DO NOT TAMPER WITH THE EXTENSION CORD OR THE UNIT POWER-SUPPLY CORD.**

Installation continued on next page

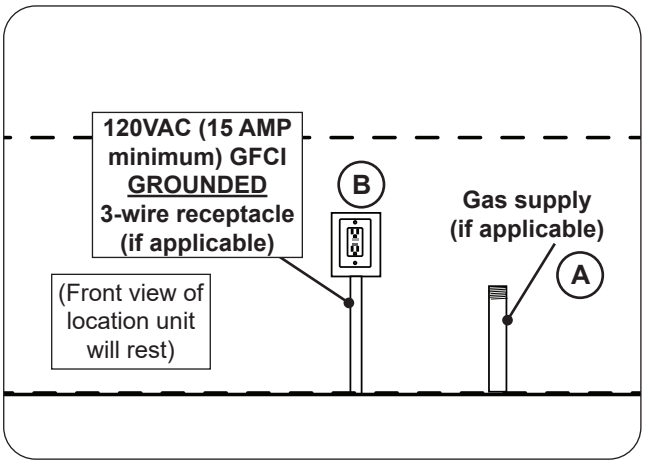

Fig. 27-1 Route gas and electrical (as applicable)

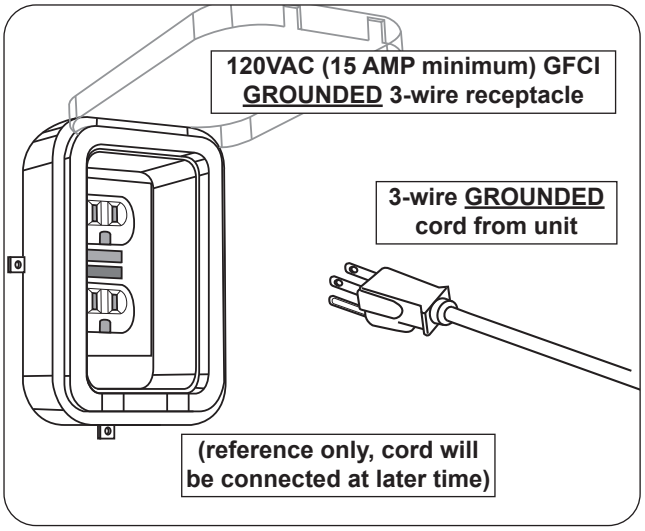

Fig. 27-2 Electrical setup detail

CONSTRUCT L.P. CYLINDER ENCLOSURE (if applicable)

If a propane cylinder is being used as the gas source, and the unit does not accommodate a cylinder, a separate propane cylinder enclosure is required. American Fyre Designs tank/end tables are available. They meet all propane cylinder enclosure and ventilation requirements. Contact your local dealer.

Alternatively, a custom-built cylinder enclosure can be constructed. Construct the enclosure according to your individual install preference, while following the guidelines found in the PROPANE CYLINDER ENCLOSURE REQUIREMENTS section.

- Construct the enclosure in an appropriate location (refer back to the LOCATION section if needed).
- **Follow all information regarding enclosure parameters, ventilation, drainage, and clearances listed in the PROPANE CYLINDER ENCLOSURE REQUIREMENTS and MINIMUM CLEARANCES sections.** Failure to do so will prevent proper operation and can cause property damage or personal injury.

Refer to the appropriate assembly section on the following pages (based on your model series number).

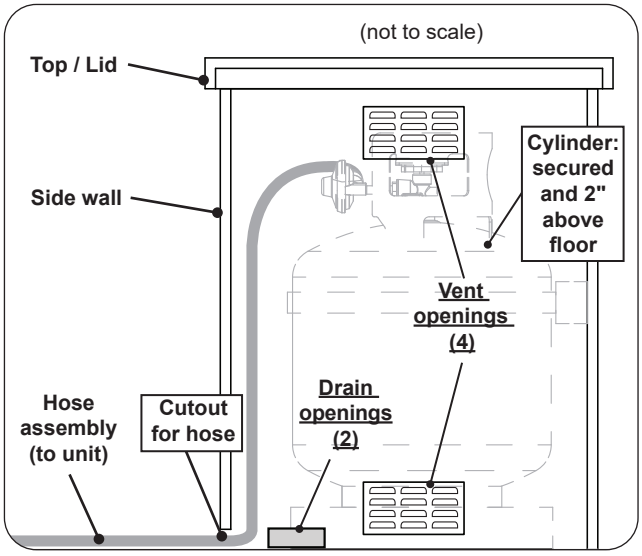

Fig. 28-1 L.P. Cylinder enclosure construction overview (if applicable)

FIRETABLE ASSEMBLY

450, 460, 581, 586, 589, 735, 736, 782, 783, 784 Models

1. **Carefully** place the base in an appropriate location (see Fig. 29-1, and refer back to the LOCATION section if needed).

Important: For reclaimed wood models, only lift the unit from the lift points (see Fig. 29-2). **DO NOT lift from the tabletop.**

2. The burner will need to be partially removed. Prior to removal, rest cardboard over the surface of the table top (to prevent damage to the finish when the burner is set aside on the unit).
3. Use a $^{5}/_{16}$" nut driver to loosen the 2-4 screws found on the burner assembly (see Fig. 29-3, A).

Note: **DO NOT** completely remove the screws - to ensure the burner brackets (beneath) remain assembled.

4. Carefully lift out the burner just enough to set it off to the side (see Fig. 29-3, B).

Important: **Lift out the burner with care to prevent damage to the electrical, thermocouple, and gas connections (as applicable).**

Proceed to the CONNECT GAS SUPPLY section.

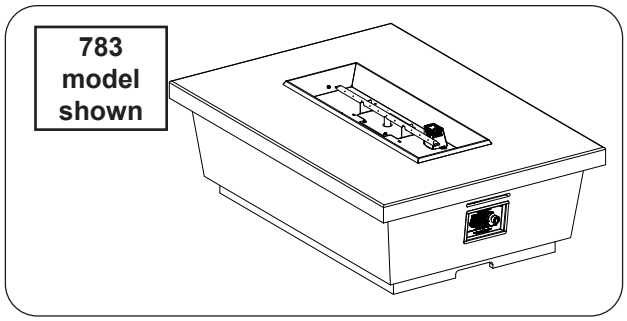

Fig. 29-1 Place unit

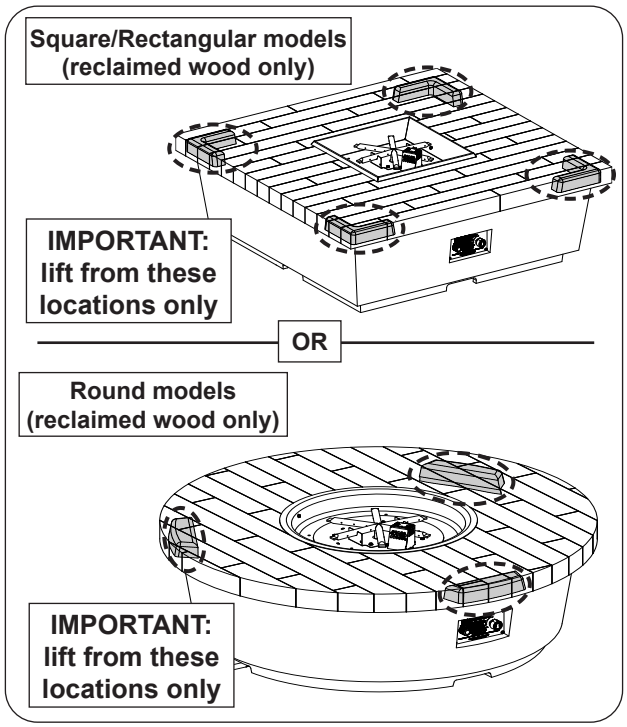

Fig. 29-2 Handling unit detail (if applicable)

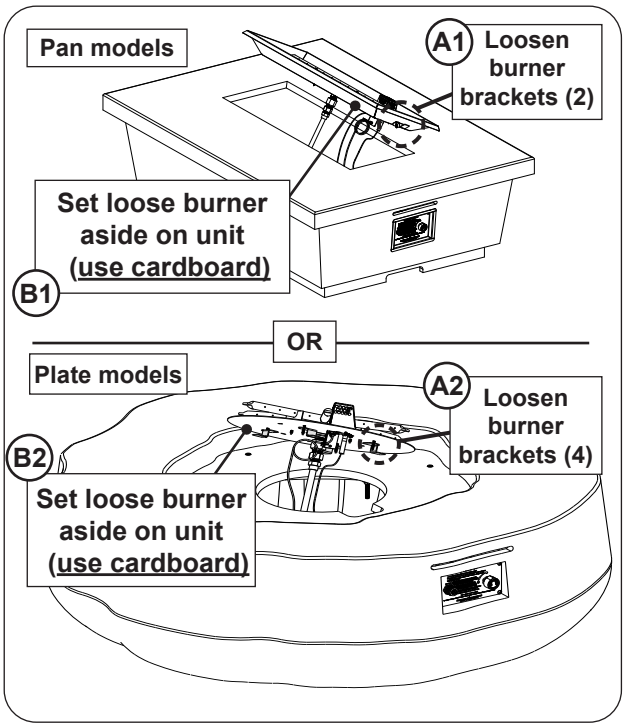

Fig. 29-3 Gain access to interior of unit

585, 587, 726, 738, 785, 788 Models

1. **Carefully** place the unit in an appropriate location (see Fig. 30-1, and refer back to the LOCATION section if needed).

Important: For 785 and 788 reclaimed wood models, only lift the unit from the lift points (see Fig. 30-2). **DO NOT lift from the tabletop.**

2. Remove/open the storage door/drawer. See below and Fig. 30-3.

   Door: remove by first turning the door handle counter-clockwise, then carefully pulling the door outward.

   Drawer: pull the drawer open until the slides are fully extended.

Proceed to the CONNECT GAS SUPPLY section.

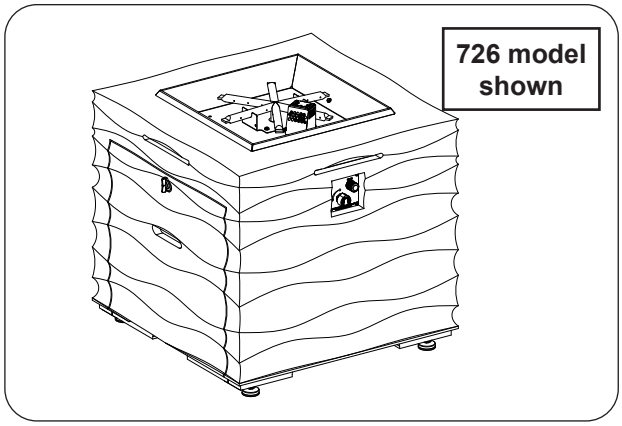

Fig. 30-1 Place unit

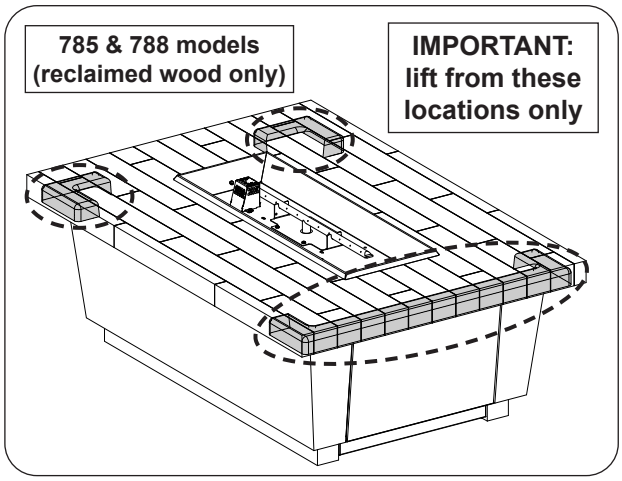

Fig. 30-2 Handling unit detail (if applicable)

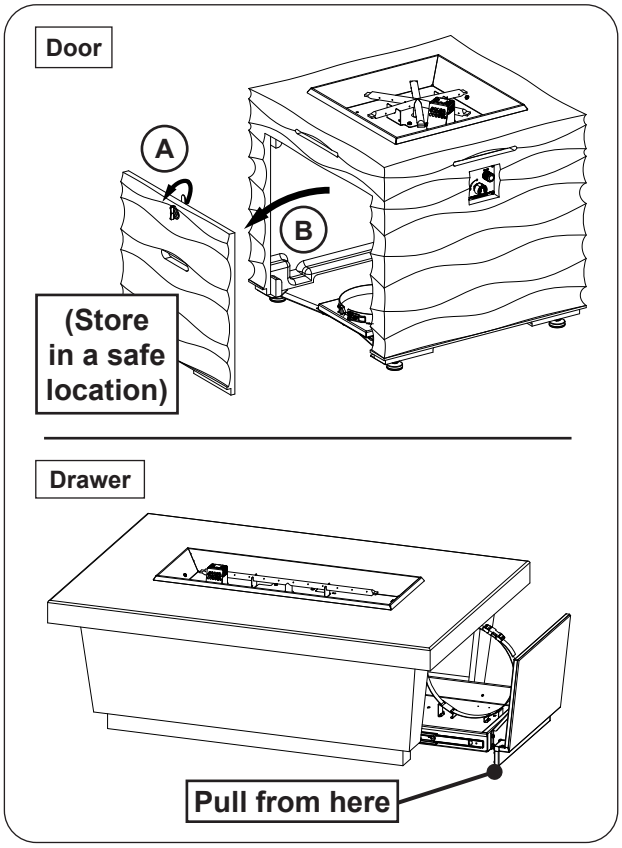

Fig. 30-3 Remove or open door/drawer (if applicable)

580, 588 (M Models Only)

1. **CAREFULLY** set the top/main unit aside and locate the metal frame where desired (see Fig. 31-1, A, and refer back to the LOCATION section if needed).
2. Apply silicone at the 4 posts, then replace the top/main unit (see Fig 29-1, B-C).
3. **For 580 models:**

   Use a $^{5}/_{16}$" nut driver to loosen the 2 screws found on the burner assembly (see Fig. 31-2, A1). Then proceed to step 5.

Note: Loosen the screws until the burner assembly can be safely removed without scratching the top unit.

For 588 models:

Use a $^{5}/_{16}$" nut driver to loosen the 8 screws found on the burner assembly (see Fig. 31-2, A2).

Note: **DO NOT** completely remove the screws - to ensure the burner brackets (beneath) remain assembled.

4. Carefully lift out the burner just enough to set it off to the side onto a piece of cardboard (see Fig. 31-2, B1 or B2 as applicable).

Important: Lift out the burner with care to prevent damage to the thermocouple and gas connections.

Proceed to CONNECT GAS SUPPLY section.

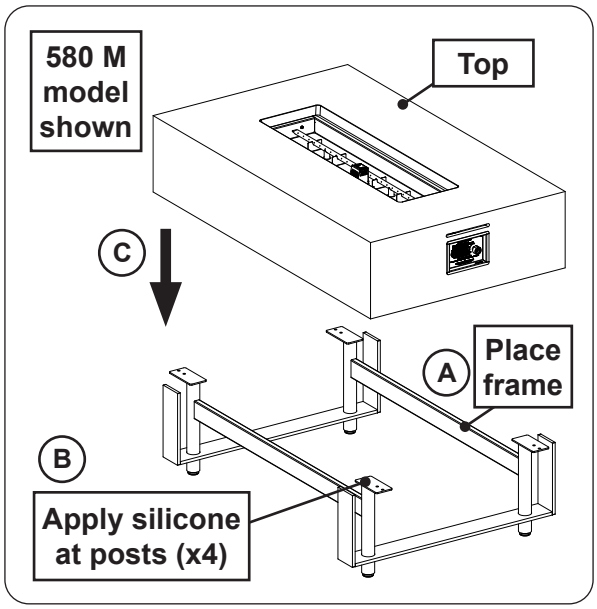

Fig. 31-1 Place unit

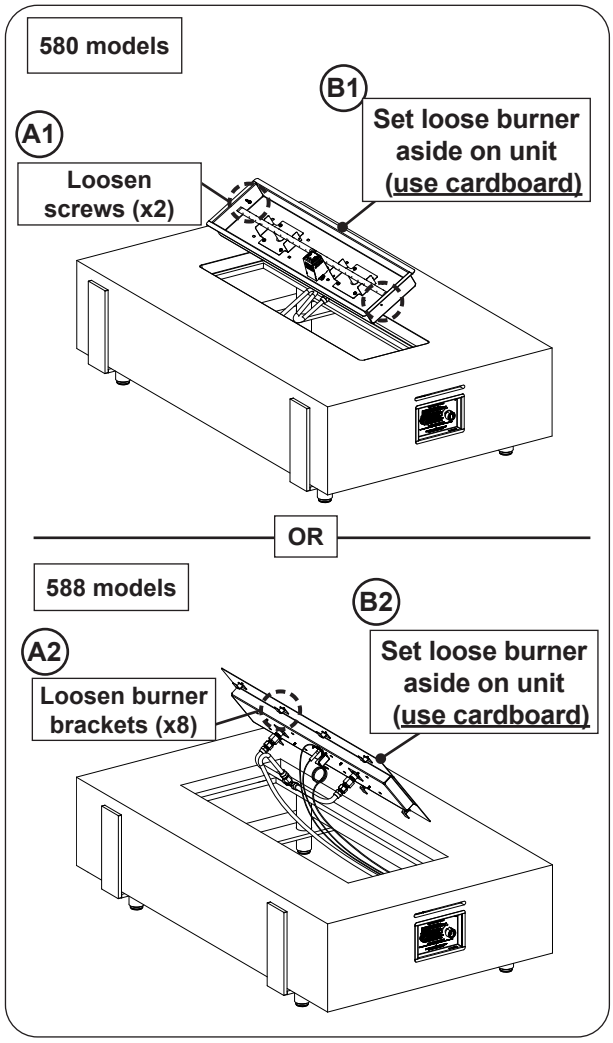

Fig. 31-2 Gain access to interior of unit

1. **For 580 (H Models Only)**

   Use a $^{5}/_{16}$" nut driver to loosen the 2 screws found on the burner assembly (see Fig. 32-1, A).

Note: Loosen the screws until the burner assembly can be safely removed without scratching the top unit.

For 588 (H Models Only)

Use a $^{5}/_{16}$" nut driver to loosen the 8 screws found on the burner assembly (see Fig. 32-2, B).

Note: **DO NOT** completely remove the screws - to ensure the burner brackets (beneath) remain assembled.

2. Carefully lower the burner down into the pit housing (see Fig. 32-2, C).

Important: Lower the burner with care to prevent damage to the electrical, thermocouple, and gas connections.

3. Disconnect the AUX switch, 4-pin connector, and two $^{1}/_{4}$" quick-connects (see Fig. 32-3).
4. **CAREFULLY** set the top/main unit piece aside. Then place the metal frame in an appropriate location, (see Fig. 32-4, and refer back to the LOCATION section if needed).

Installation continued on next page

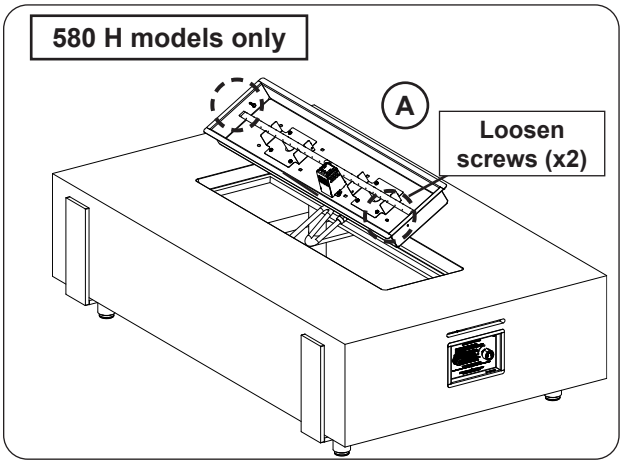

Fig. 32-1 Gain access to interior of unit

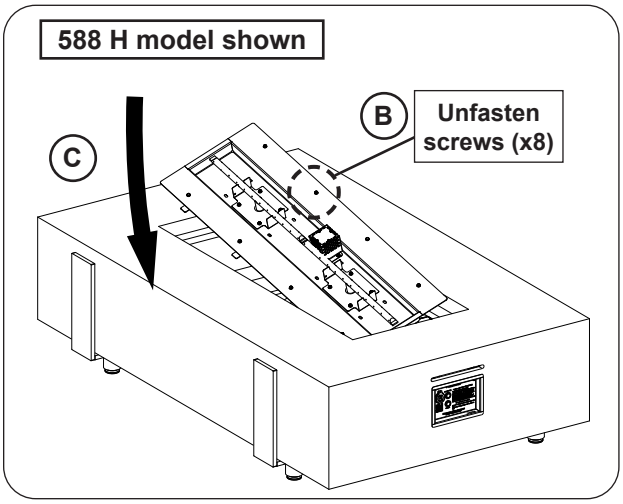

Fig. 32-2 Lower burner into unit

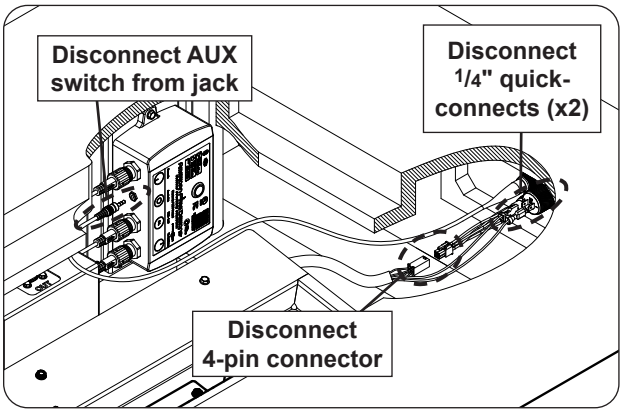

Fig. 32-3 Disconnect AUX switch, connector, and two quick connects

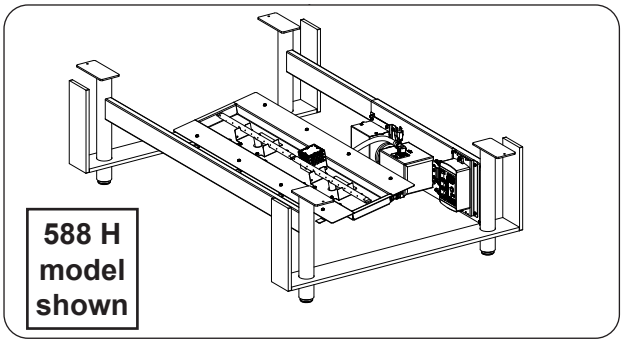

Fig. 32-4 Remove top piece, place frame

580, 588 (H Models Only) cont.

5. Apply silicone at the 4 posts, and replace the top/main unit (see Fig. 33-1).
6. Reconnect the AUX switch (see Fig. 33-2).
7. Reconnect the 4-pin connector and the two 1/4" quick-connects (see Fig. 31-3).

Important: Ensure the red quick-connect is connected to positive and the black quick-connect to negative.

8. Carefully lift out the burner just enough to set it off to the side onto a piece of cardboard (see Fig. 33-4).

Important: Lift out the burner with care to prevent damage to the electrical, thermocouple, and gas connections.

Proceed to CONNECT GAS SUPPLY section.

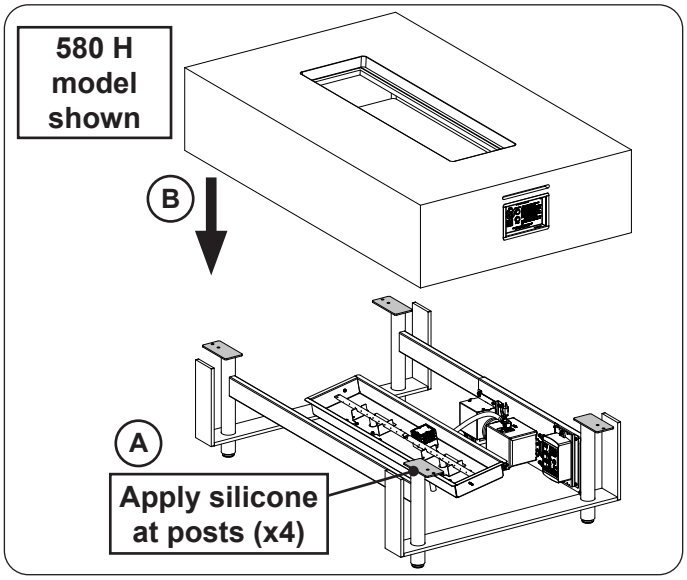

Fig. 33-1 Replace top/main unit

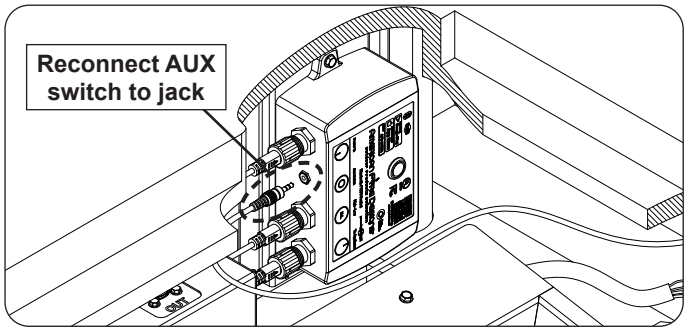

Fig. 33-2 Reconnect AUX switch

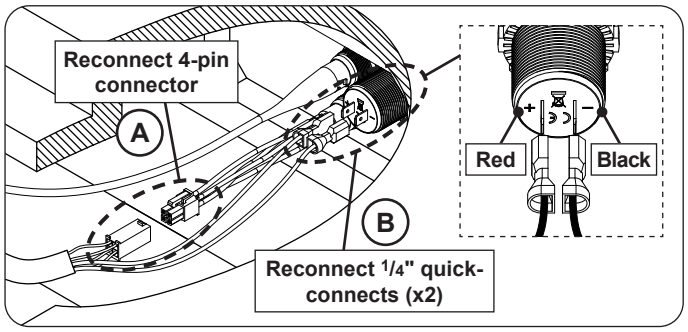

Fig. 33-3 Reconnect connector and two quick-connects

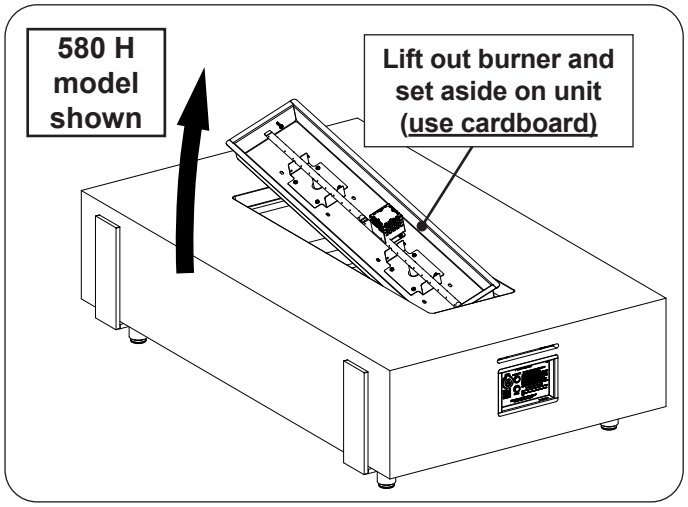

Fig. 33-4 Gain access to interior

635, 640, 642, 645, 725 (M Models Only)

1. **Carefully** remove the valve and burner assembly from the base, then **carefully** place the base in an appropriate location (see Fig. 34-1, A, and refer back to the LOCATION section if needed).
2. Remove the storage door by first turning the door handle counter-clockwise, then carefully pulling the door outward (see Fig. 34-1B). Store in a safe location.
3. **Carefully** place the top on the unit (see Fig. 34-1, C).
4. Locate the valve and burner assembly. Remove the control knob. Use a 20mm socket to remove the nut attached to the valve stem. See Fig. 34-1, D, and reference Fig. 34-2 for details.

   Then drop the valve and burner assembly into the opening in the center of the firetable top, <u>with the two burner pan holes facing toward the door</u> (see Fig. 34-1, E).

Important: **<u>Ensure the electrical, thermocouple, and gas connections (as applicable) are clear, undamaged, and completely inserted into the opening, and that the burner assembly is correctly inserted without any obstructions between it and the firetable top. It must sit flat. Handle with care.</u>**

5. Insert the valve assembly through the plate (in the base). Replace the nut onto the valve stem, and tighten. Reinstall the control knob. See Fig. 34-2.

Important: **Handle with care to prevent damage to the thermocouple, electrical, and gas connections (as applicable). Ensure the valve is oriented and inserted in the manner shown. See Fig. 34-2.**

6. Locate the electrode wire and connect it to the round-pin terminal found on the back of the igniter electrode module. Then locate the ground wire and connect it to the 1/4" quick connect found on the side of the igniter electrode module (just behind the plate). See Fig. 34-3.
7. Locate the supplied support bracket and install as shown in Fig. 34-4. The bracket must be inserted into the enclosure through the door opening, aligned with the holes found on the burner pan, and fastened with a 1/2" wrench and the supplied bolts (2), nuts (2), and washers (4).

Note: **<u>Ensure the electrical, thermocouple, and gas connections (as applicable) are clear and before tightening the bracket.</u>**

Proceed to the CONNECT GAS SUPPLY section.

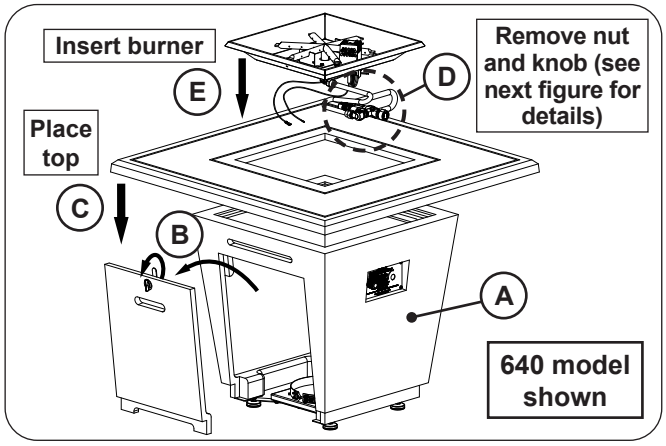

Fig. 34-1 Place base, remove door, place top and burner

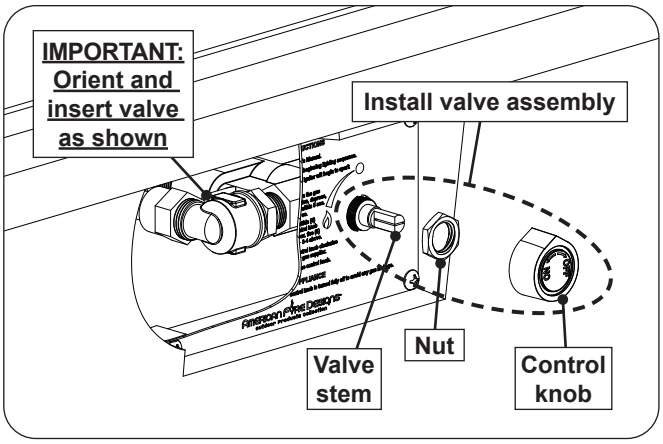

Fig. 34-2 Install valve assembly

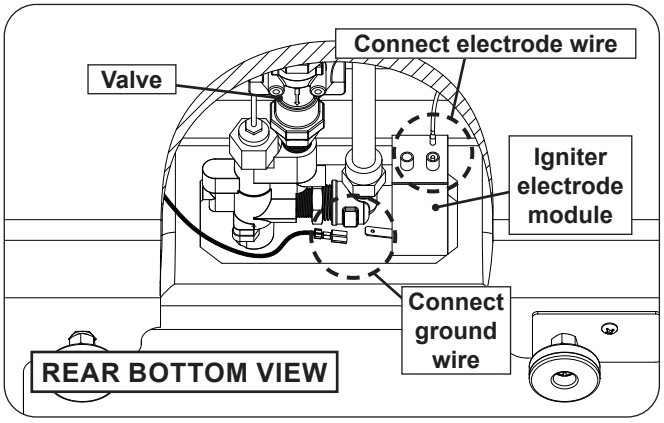

Fig. 34-3 Connect wires to electrode module

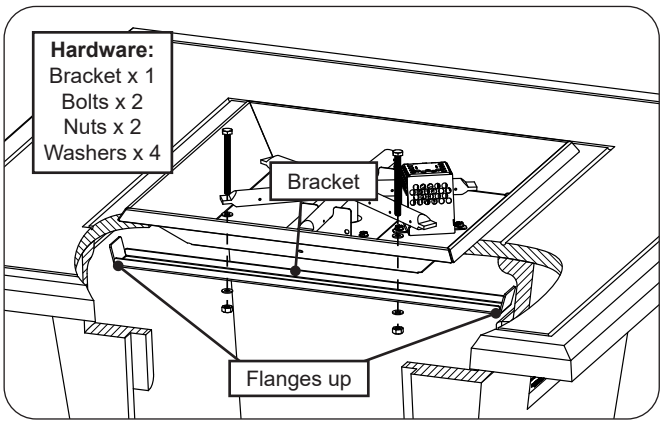

Fig. 34-4 Install bracket

635, 640, 642, 645 (H Models Only)

1. **Carefully** remove the burner assembly from the base, then **carefully** place the base in an appropriate location (see Fig. 35-1, and refer back to the LOCATION section if needed).
2. Remove the storage door by first turning the door handle counter-clockwise, then carefully pulling the door outward (see Fig. 35-1). Store in a safe location.
3. **Carefully** place the top on the unit (see Fig. 35-2, A).
4. Drop the burner assembly into the opening in the center of the firetable top, with the two burner pan holes facing toward the door (see Fig. 35-2, B).

Important: **Ensure the pilot line, thermocouple, and electrical connections are clear, undamaged, and completely inserted into the opening, and that the burner assembly is correctly inserted without any obstructions between it and the firetable top. It must sit flat. Handle with care.**

5. Locate the flex connector (marked OUT) that is coming off the valve assembly. Route it to the connection found on the underside of the burner assembly and connect. Tighten securely. See Fig. 35-2, C.
6. Connect the pilot line, thermocouple, and hot surface igniter (coming from the burner assembly) to the control box (see Fig. 35-3).
   - Use 9/16" and 7/16" wrenches to tighten the pilot line to the control box.
   - Use 3/8" and 7/16" wrenches to tighten the thermocouple to the control box.
   - For the igniter simply make the molex connection.
7. Locate the supplied support bracket and install as shown in Fig. 35-4. The bracket must be inserted into the enclosure through the door opening, aligned with the holes found on the burner pan, and fastened with a 1/2" wrench and the supplied bolts (2), nuts (2), and washers (4).

Note: **Ensure the pilot line, thermocouple, and electrical connections are clear before tightening the bracket.**

Proceed to the CONNECT GAS SUPPLY section.

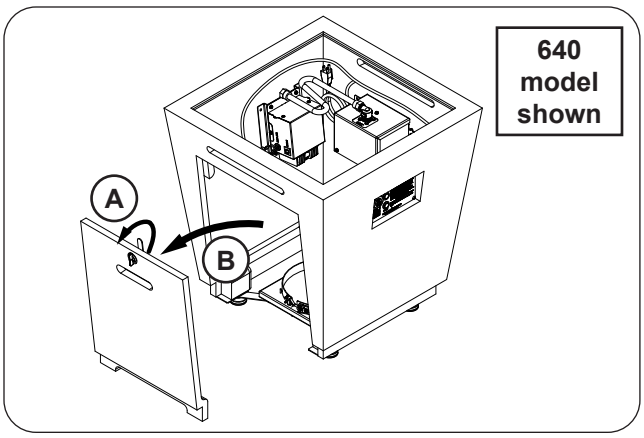

Fig. 35-1 Place base and remove door

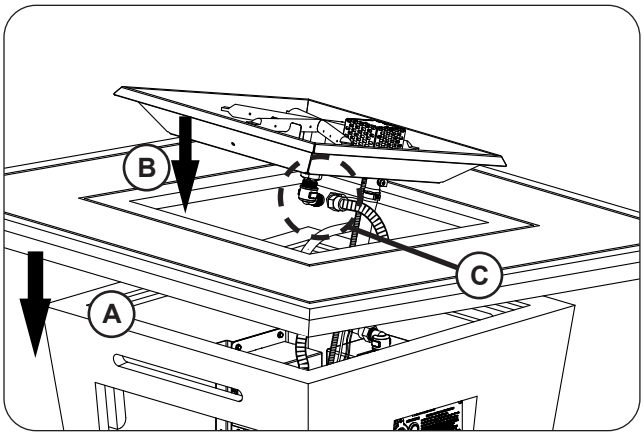

Fig. 35-2 Place top, burner, and connect flex

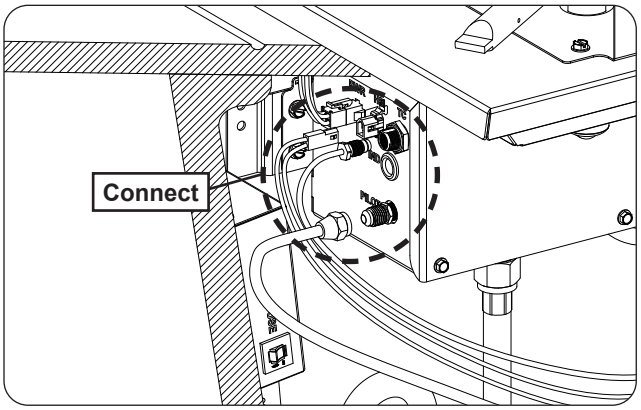

Fig. 35-3 Connect pilot line, thermocouple, and hot surface igniter

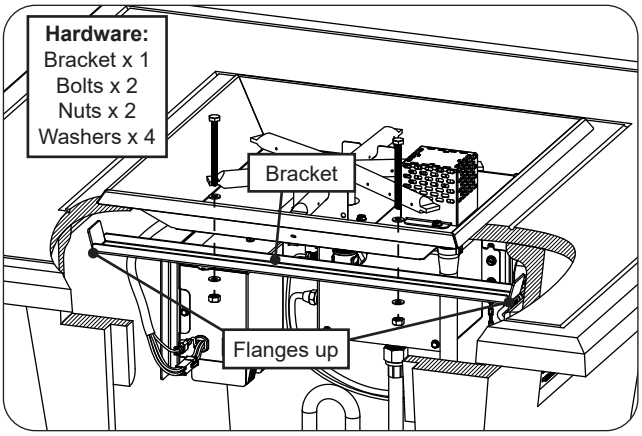

Fig. 35-4 Install bracket

770, 775 Models

1. **Carefully** remove the valve and burner assembly from the base, then **carefully** place the base bottom and base in an appropriate location (see Fig. 36-1, A, and refer back to the LOCATION section if needed).
2. Use a Phillips screwdriver and the supplied concrete screws (3) to fasten the base bottom to the base as shown in Fig. 36-1, A.
3. Remove the storage door by first turning the two thumb screws counter-clockwise, then carefully pulling the door up and outward (see Fig. 36-1, B). Store in a safe location.
4. **Carefully** place the top on the unit, ensuring that the holes in the top piece align with the holes found in the bracket below (see Fig. 36-2, A).
5. Use a flathead screwdriver and the supplied bolts (3), nuts (3), and washers (3) to fasten the top to the bracket as shown in Fig. 36-2, A.
6. Locate the valve and burner assembly. Remove the control knob. Use a 20mm socket to remove the nut attached to the valve stem. See Fig. 36-2, B.

   Then apply silicone along the top, and then drop the valve and burner assembly into the opening in the center of the firetable top as shown in Fig. 36-2, C1 and C2.

Important: **Ensure the thermocouple and gas connections are clear, undamaged, and completely inserted into the opening, and that the burner assembly is correctly inserted without any obstructions between it and the firetable top. It must sit flat. Handle with care.**

7. Insert the valve assembly through the plate (in the base). Replace the nut onto the valve stem, and tighten. Reinstall the control knob. See Fig. 36-3.

Important: **Handle with care to prevent damage to the thermocouple and gas connections. Ensure the valve is oriented and inserted in the manner shown. See Fig. 36-3.**

8. Locate the electrode wire and connect it to the round-pin terminal found on the back of the igniter electrode module. Then locate the ground wire and connect it to the 1/4" quick connect found on the side of the igniter electrode module (just behind the plate). See Fig. 36-4.

Proceed to the CONNECT GAS SUPPLY section.

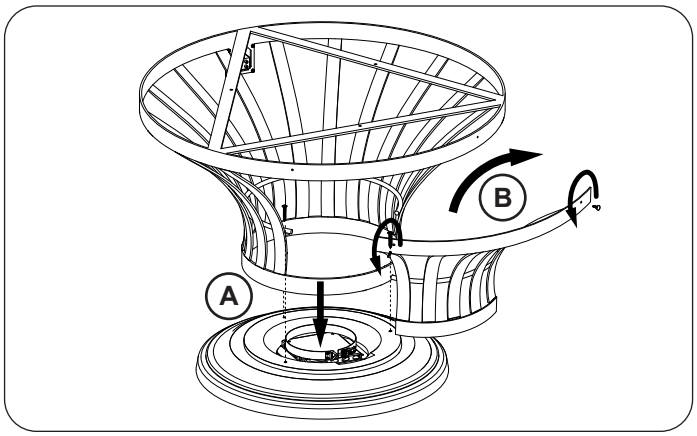

Fig. 36-1 Place base, fasten, and remove door

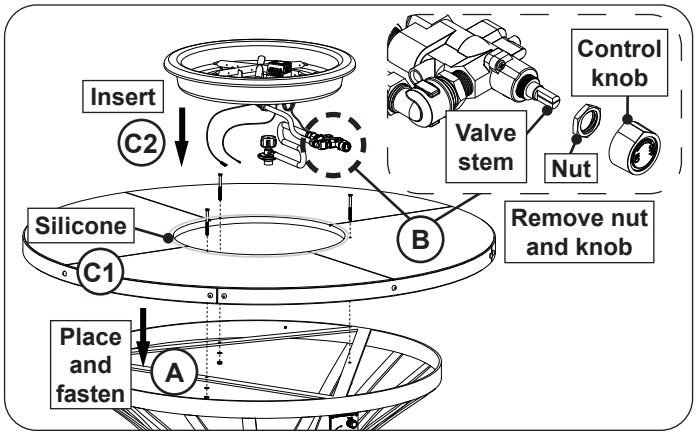

Fig. 36-2 Place top and fasten, place burner

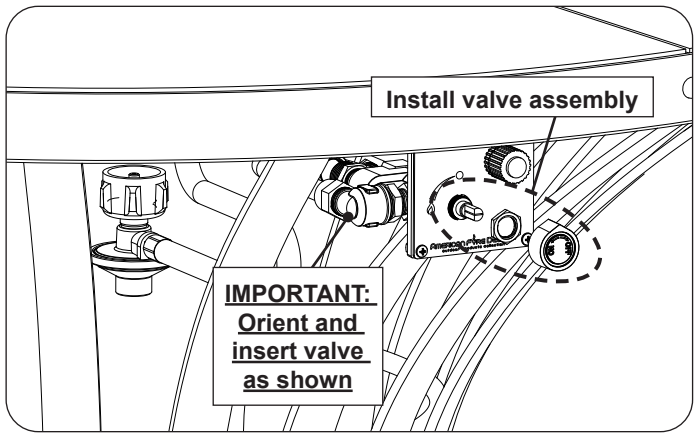

Fig. 36-3 Install valve assembly

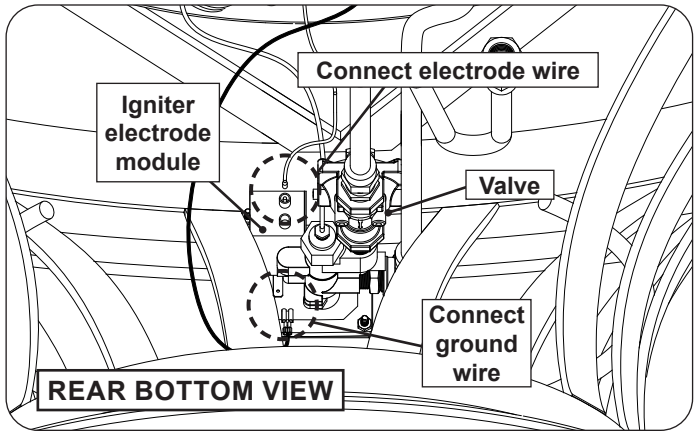

Fig. 36-4 Connect wires to electrode module

CONNECT GAS SUPPLY

See the following pages for connecting to a propane cylinder on models with a storage door/drawer, and for connecting to a natural or household propane gas supply.

Important: **Before installation,** be sure the gas supply (propane or natural) is turned off at its source.

To Connect To Propane Cylinder:

Models Without a Storage Door/Drawer:

If a propane cylinder is being used as the gas source, and the unit does not accommodate a cylinder, a separate propane cylinder enclosure is required. See the PROPANE CYLINDER ENCLOSURE REQUIREMENTS for details on American Fyre Designs tank/end tables, or custom-built enclosures. Then proceed to the steps below.

- A flex connector is pre-installed and comes off of the valve assembly.
- An L.P. regulator hose assembly (10 feet max - included for select models) must be connected to the above mentioned flex connector. **DO NOT connect the hose assembly directly to the burner assembly.** An adapter/additional components will be required.
- Propane extension hoses are available from American Fyre Design. Contact your local dealer for ordering information.

1. Connect the L.P. regulator hose assembly (not included) to the flex connector that is coming off of the valve assembly (see Fig. 37-1).

   Observe all codes and ensure all appropriate connections are used to properly connect the gas supply. Apply only joint compounds that are resistant to all gasses to all male pipe fittings except flare fittings. **Make sure to tighten every joint securely.**
2. Attach the regulator end of the hose assembly to a propane cylinder (not included) and tighten (see Fig. 37-2).
3. The propane cylinder (not included) is to be located inside the separate propane cylinder enclosure (see Fig. 37-3).

Installation continued on next page

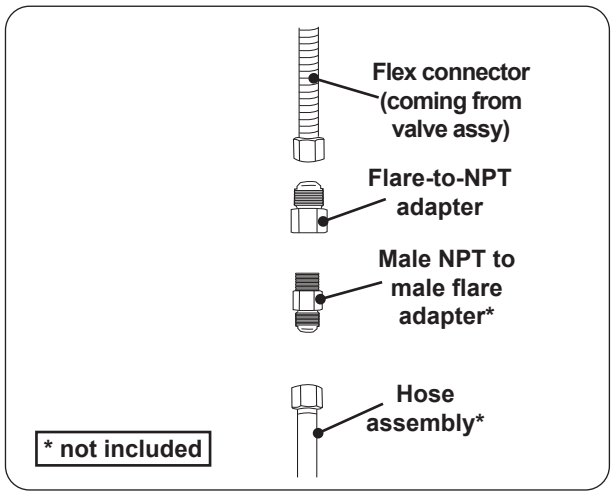

Fig. 37-1 Connecting flex to hose assy

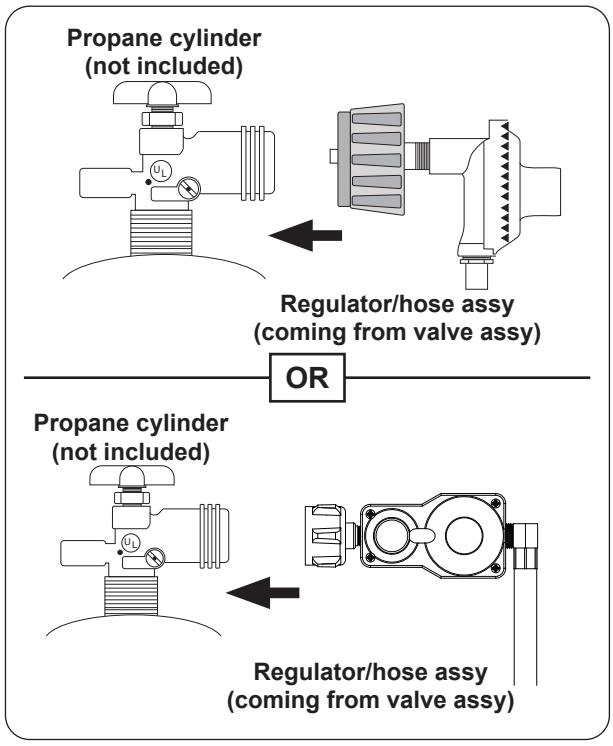

Fig. 37-2 Connecting hose assy to L.P. cylinder

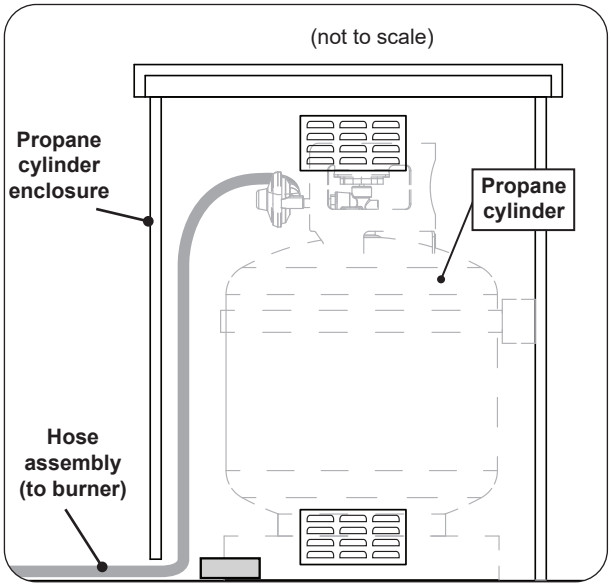

Fig. 37-3 L.P. Cylinder placement

Models With a Storage Door/Drawer:

Select L.P. models are equipped with a storage door/ drawer and accommodate a propane cylinder.

1. Locate the regulator hose assembly that is already installed on the rear of the valve assembly.
2. Attach the regulator end of the hose assembly to a propane cylinder (not included) and tighten (see Fig. 38-1).
3. The propane cylinder (not included) is to be located inside the base of the unit, via the storage door/drawer opening. Insert the cylinder into the tank holder tray and secure it. See Fig. 38-2, Fig. 38-3 (if applicable), and the details below:

585, 587, 738, 785 & 788 Models:

- A **horizontal 20lb DOT Type or 11lb Low Profile steel DOT Type** L.P. cylinder is required for operation.
- **738 models:** 11 lb Low Profile tanks are **NOT** compatible with this unit.
- Using a **Manchester 20lb horizontal LP tank (Model 10487TC)** is recommended and verified to work with this outdoor appliance.
- **ONLY use a 11lb Low Profile L.P. steel tank with an Overfill Protection Device (ODP) valve.**
- **DO NOT USE FIBERGLASS COMPOSITE L.P. TANKS.**
- Ensure it is in the correct upright position, centered on the tray, and with the valve facing inward. See Fig. 38-2, 38-3 and follow the warning labels on the tank for proper placement.
- Ensure the strap is used to secure the cylinder in place.

Important: Take extra caution to not kink or damage regulator hose when inserting tank back into unit.

Important: **INSTALLATION MUST BE PERFORMED BY A QUALIFIED INSTALLER, SERVICE AGENCY OR GAS SUPPLIER.**

WARNING: **A vertical tank must never be operated on its side. A fire causing death or serious injury may occur.**

CAUTION: **FILL IN THE VERTICAL POSITION ONLY, DO NOT OVERFILL. OVERFILLING IS HAZARDOUS.** Check after each filling by opening small outage valve and bleed gas in a well vented area until white liquid stops. Installation and fueling procedures must conform to NFPA NC. 58 & ANSI A119.2 OR other state or local codes where applicable. See **ALL WARNINGS** label on L.P. tank for essential safety information and warnings for proper use, handling, and potential hazards.

ALL OTHER MODELS:

- Insert the cylinder.
- Hook the round end of the pull-latch-screw over the bracket (found on collar of tank holder tray).
- Snap the pull-latch-handle closed.
- Ensure the collar is securely holding the cylinder in place. (If needed the pull-latch-screw-hook can be adjusted to tighten or loosen the collar.) See Fig. 38-2.

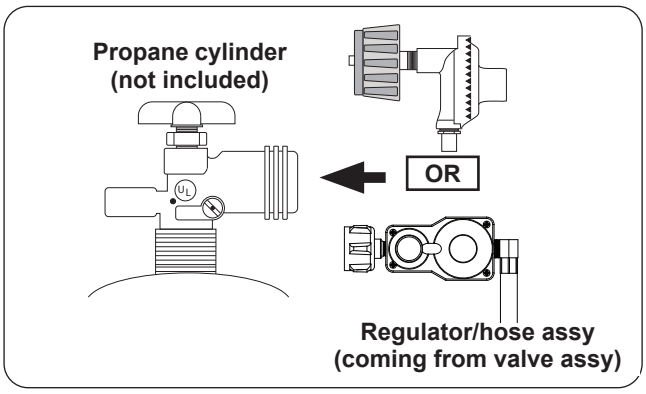

Fig. 38-1 Connecting to an L.P. cylinder

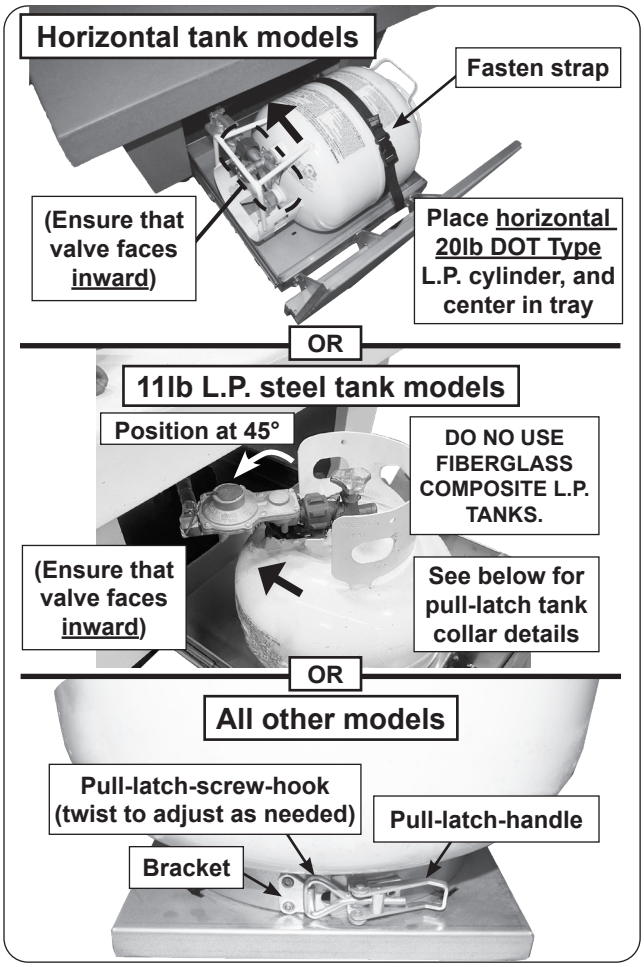

Fig. 38-2 L.P. Cylinder placement

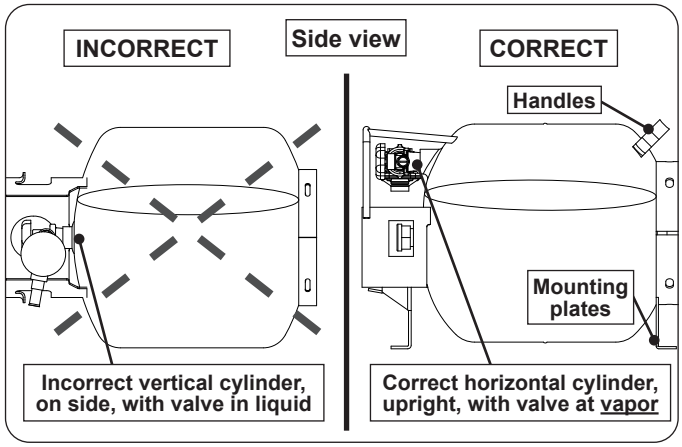

Fig. 38-3 Horizontal L.P. Cylinder detail (if applicable)

To Connect To Natural or Household Propane Gas Supply:

1. Locate the flex connector (marked IN) that is coming off the valve assembly.
2. Locate the gas supply that is beneath the unit (previously routed at beginning of installation).
3. A shut-off valve is required within 6 feet of the unit and it must be easily accessible.

   If shut-off valve is installed in-line:

   - Install the supplied flare-to-NPT adapter to the gas supply (NPT) using a pipe joint compound resistant to all gasses (see Fig. 39-1, A). Tighten securely.
   - Connect the flex connector to the adapter (see Fig. 39-1, A). Tighten securely.

   If shut-off valve is connected to end of gas supply stub:

   - Connect the flex connector to the shut-off valve (flare)(see Fig. 39-1, B). Tighten securely.

Installation continued on next page

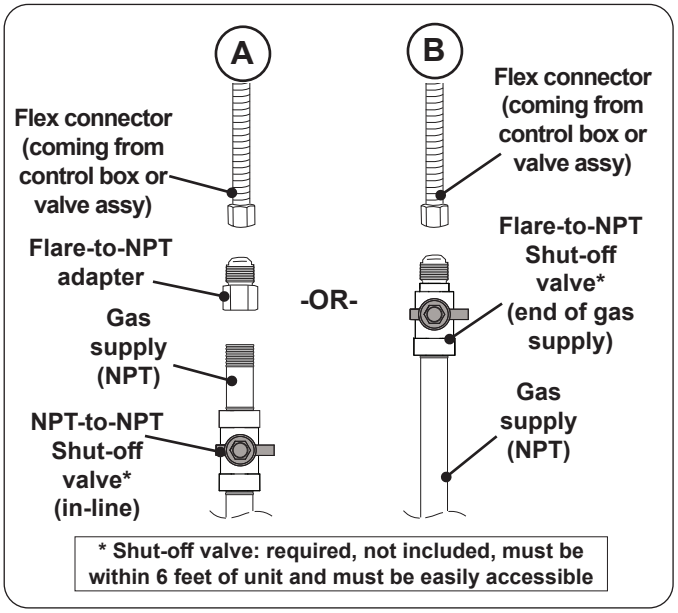

Fig. 39-1 Connecting to a gas line

LEAK TEST

Turn on the gas supply, and test at all connections for leaks using a soapy water solution. If bubbles appear, a leak is present. Turn off the gas and tighten at all connections. Repeat until no leaks are present. If a leak persists, turn off the gas supply and contact the local gas company or dealer. **NEVER USE A FLAME TO CHECK FOR LEAKS.**

CONNECT POWER SUPPLY CORD (if applicable)

Route the cord (coming from valve box/power supply) to the previously wired **120VAC (15 AMP minimum) GFCI GROUNDED 3-wire receptacle** and connect (see Fig. 40-1).

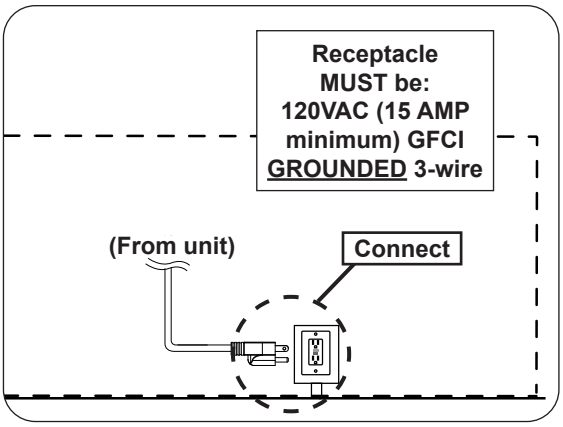

Fig. 40-1 Route and connect power supply cord

INSTALL BURNER ASSEMBLY (if needed)

1. Ensure that the 2-4 burner brackets are turned inward, then insert the burner assembly (see Fig. 40-2, A-B).

Important: **Ensure the electrical, thermocouple, and gas connections (as applicable) are clear, undamaged, and completely inserted into the opening, and that the burner assembly is correctly inserted without any obstructions between it and the unit. It must sit flat. DO NOT pinch any wires. Handle with care.**

2. Use a 5/16" nut driver to fasten the burner to the base (see Fig. 40-3).

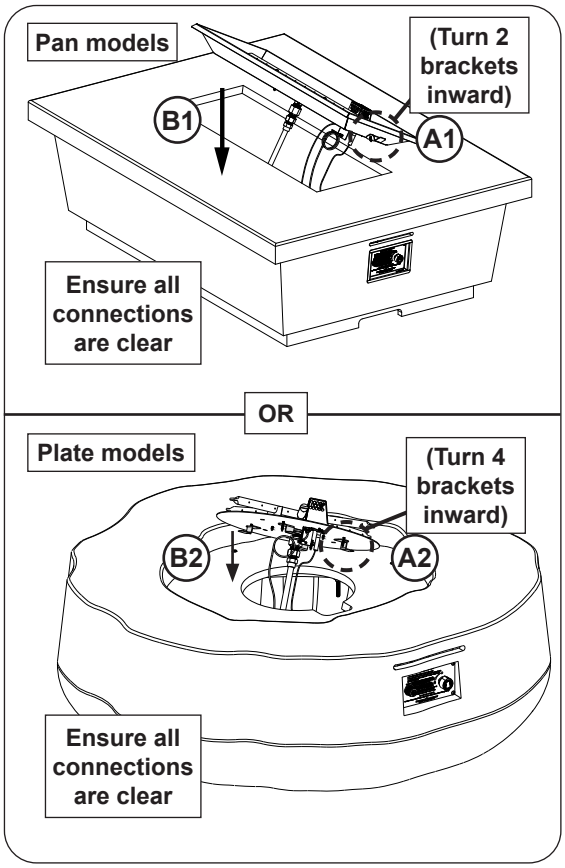

Fig. 40-2 Insert burner assembly

INSTALL BATTERIES (if applicable)

At this stage the burner system batteries are to be installed. Reference the SERVICING AND CLEANING - BATTERY INSTALLATION/REPLACEMENT section for details.

LIGHTING TEST

Prior to proceeding with installation, perform a lighting test (see lighting instructions for lighting your burner).

Allow the unit to completely cool after testing.

REPLACE/CLOSE STORAGE DOOR/DRAWER (if applicable)

Replace/close the storage door/drawer (that was previously removed/opened during the assembly section). Ensure the door is secure in place. Door design may vary.

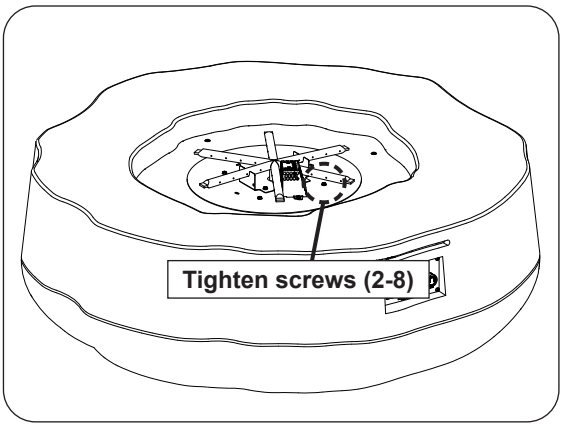

Fig. 40-3 Secure burner

DECORATIVE MEDIA PLACEMENT

WARNING: Failure to position the parts in accordance with these diagrams or failure to use only parts specifically approved with this appliance may result in property damage or personal injury.

CAUTION: Be sure the unit and the decorative media are completely cool anytime the media is handled. **Wear gloves whenever installing and handling as certain media may have sharp edges that can cause personal injury.**

Important: **Keep the screen clear of decorative media and any other items / debris at all times.** This will allow for proper ignition and operation. **DO NOT** cover.

REQUIRED BASE MEDIA (SUPPLIED)

1. Pour the 5 or 10 lb bag of lava granules labeled "REQUIRED BASE MEDIA" into the burner pan (with the exception of the screen). Spread the granules within the burner area as shown in Fig. 41-1 and Fig. 41-2. **Only fill the granules up to the top of the burner tube.**
2. **Proceed to the following section to complete media placement.**

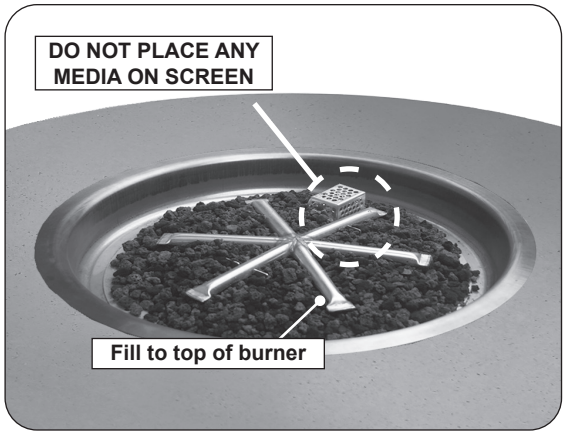

Fig. 41-1 Place lava granules

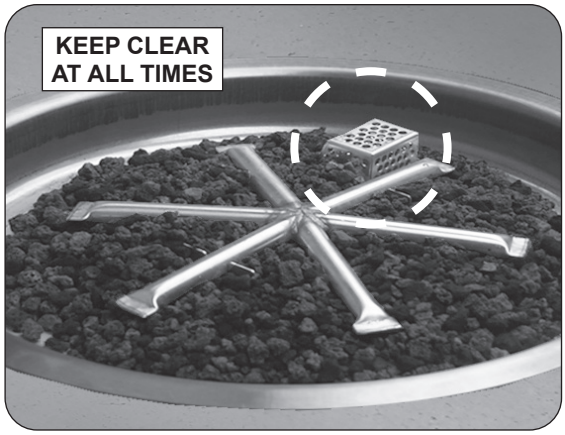

Fig. 41-2 Screen detail

PRIMARY AND SECONDARY MEDIA OPTIONS

Additional American Fyre Design decorative media MUST then be placed to cover the burner. If using lava granules as the primary media, use the remaining bags labled "PRIMARY GRANULE MEDIA" included with your unit. Any other decorative media is purchased and packaged separately. Contact your local American Fyre Designs dealer for ordering information. Locate the following section(s) that apply to your option(s) chosen and install accordingly.

The included lava granule base and one of the primary media options (lava granules [included] or any other media [not included]) are required for safe operation and proper performance. Place first. All other media is optional.

Reference the SPECIFICATIONS AND DIMENSIONS section for details on the recommended amounts of media.

Lava Media

After the required base lava granules have been placed, pour the additional lava granules (included) or lava coals (not included) evenly into the burner pan (with the exception of the screen). The lava should be 1-2" above the burner. See Fig. 42-1.

Important: DO NOT exceed a height of 2" above the burner when placing lava media. Ensure no media covers the screen. Store any excess media in a safe location.

Note: For models that include a GFRC cover, media cannot exceed the screen height for cover to properly fit your model.

Lava Stones

(Not for use when an L.P. Cylinder is installed within the Firetable unit.)

1. **Lava stones first require lava media to completely fill the burner pan.** See previous REQUIRED BASE MEDIA and Lava Media sections to place the lava, then proceed to step 2.
2. Pour the lava stones evenly into the burner area (see Fig. 42-2). The stones may form a mound. Ensure lava stones are not sitting on top of screen. **Store any excess media in a safe location.**

Note: For models that include a GFRC cover, the lava stones will first need to be removed and stored in a safe location to place the cover properly.

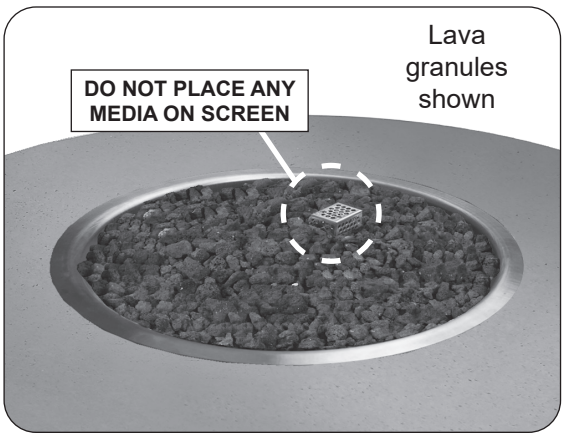

Fig. 42-1 Lava media option

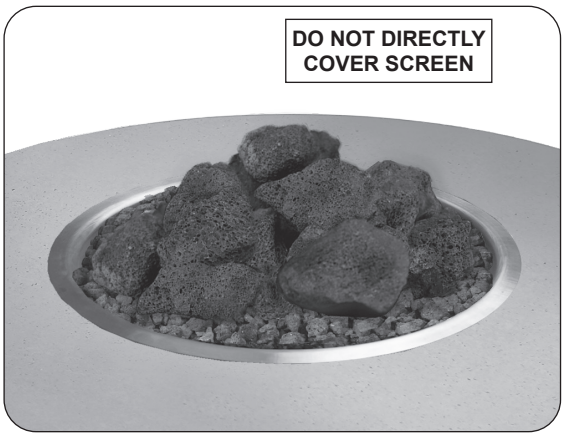

Fig. 42-2 Lava stones option

DECORATIVE MEDIA PLACEMENT (cont.)

Glass Media

After the required base lava granules have been placed, pour the glass media (glass, gems) evenly into the burner pan (see Fig. 43-1). The glass should be 1-2" above the burner.

Important: **DO NOT place any glass media on the screen. Ensure no existing lava granules are covering the screen.**

DO NOT exceed a height of 2" above the burner when placing glass media. Store any excess media in a safe location.

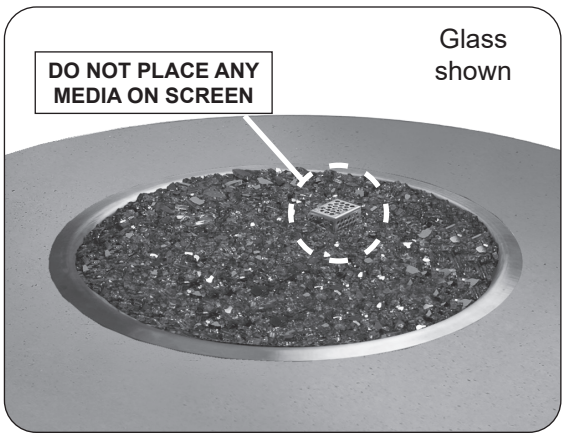

Fig. 43-1 Glass option

Additional Secondary Options

After the required base lava granules and primary media have been placed, various river stone, creekstone, fyre sphere, wood chunk, and glass nugget options are available. If one of these secondary options are purchased, place them as desired in a decorative pattern on top of the primary media. See Fig. 43-2 for an example.

Note: These options are not designed to be placed directly on the burner.

Note: **For models that include a GFRC cover, the secondary media will first need to be removed and stored in a safe location to place the cover properly.**

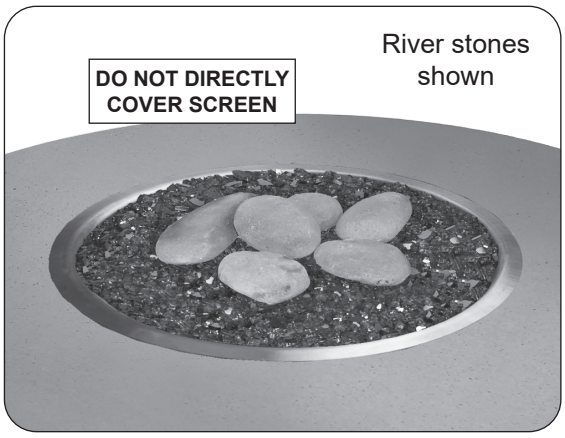

Fig. 43-2 Secondary options

APP SETUP (H MODELS ONLY)

For the instruction manual and videos related to app setup (and operation), refer to the Fyrestarter bluetooth control web page. See below.

Visit www.americanfyredesigns.com/fyrestarter/ or simply scan the QR code (see Fig. 43-3).

Fig. 43-3 AFD QR code

STAINLESS STEEL & GFRC COVERS

Stainless steel and GFRC covers are available to protect your unit when not in use. Certain models include a cover. Contact your local dealer for ordering information.

To install, ensure the unit is completely off (including POWER button for H models), allow the unit to cool completely, then place the cover as shown in Fig. 44-1.

Note: Certain decorative media (such as river stones, logs, etc.) may interfere with the proper placement of the cover. They will need to be removed and stored in a safe location when the cover is in use.

Remove cover before use.

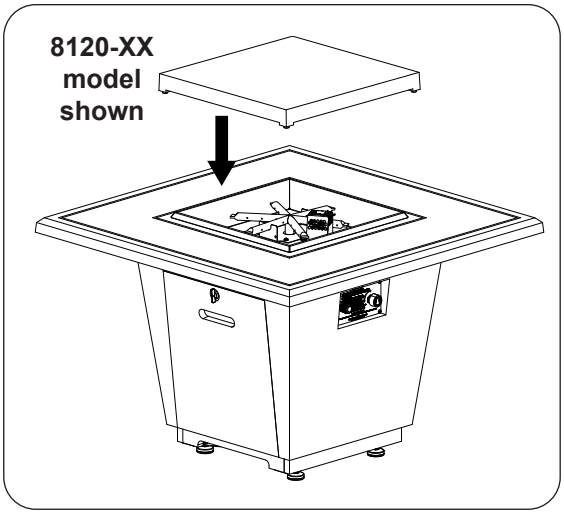

Fig. 44-1 GFRC cover

OPTIONAL FABRIC COVERS

An optional fabric cover is available to protect your unit when not in use (certain models). Contact your local dealer for ordering information.

To install, ensure the unit is completely off (including POWER button for H models), allow the unit to cool completely, then place the cover over the unit with the American Fyre Designs logo facing upward. See Fig. 44-2.

Follow all instructions provided with the fabric cover.

Note: Certain decorative media (such as river stones, logs, etc.) may interfere with the proper placement of the cover. They will need to be removed and stored in a safe location when the cover is in use.

Remove cover before use.

Fig. 44-2 Fabric cover

OPTIONAL WIND GUARDS

An optional wind guard is available to enhance your unit aesthetically and improve its flame appearance (certain models). Contact your local dealer for ordering information.

Once assembled, allow the unit to cool completely, then place the accessory onto your firetable, being sure that it is centered over the burner. See Fig. 44-3.

Follow all instructions provided with the wind guard.

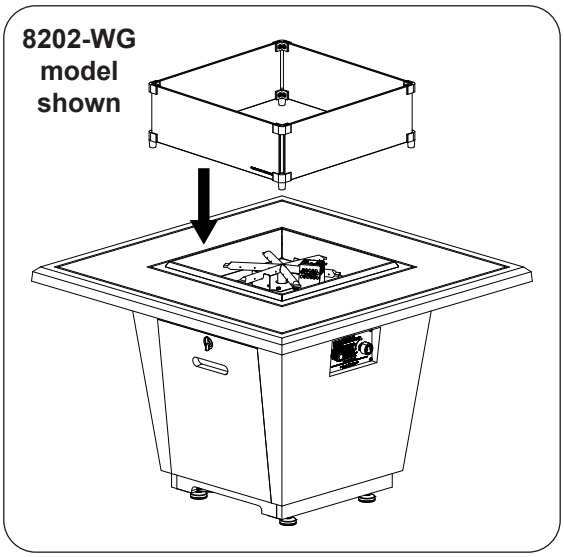

Fig. 44-3 Wind guard

LIGHTING INSTRUCTIONS - FYRESTARTER MODELS

FOR YOUR SAFETY, READ BEFORE LIGHTING

WARNING: IF YOU DO NOT FOLLOW THESE INSTRUCTIONS EXACTLY, A FIRE OR EXPLOSION MAY RESULT, CAUSING PROPERTY DAMAGE, PERSONAL INJURY, OR LOSS OF LIFE.

A. This appliance is equipped with an ignition device that automatically lights the pilot. **DO NOT** attempt to light the pilot by hand.

B. **BEFORE LIGHTING**, smell all around the unit area for gas. Be sure to smell next to the floor, because some gas is heavier than air and will settle on the floor.

C. **WHAT TO DO IF YOU SMELL GAS**

1. Shut off the gas to the appliance.
2. Extinguish any open flame.
3. If odor continues, immediately call your gas supplier or the fire department.

D. Use only your hand to push in the controls. Never use tools. If the control will not push in or move by hand, **DO NOT** try to repair it. Call a qualified professional service technician. Force or attempted repair may result in fire or explosion.

BURNER OPERATION - MANUAL MODE

Lighting

CAUTION: **DO NOT** attempt to light the pilot by hand.

1. Locate the control panel on the side of the unit (refer to the IDENTIFICATION PARTS LIST if needed), and identify the **AUX CONTROL** and **POWER** buttons (see Fig. 45-1).
2. Push the **POWER** button. The light will illuminate indicating the system is on and ready.
3. Push the **AUX CONTROL**. The light will illuminate and the burner ignition sequence will begin.

WARNING: **If the pilot fails to light within 15 seconds, or if the burner fails to light within 15 seconds of pilot lighting, push the POWER button on the control panel to turn off. Allow five (5) minutes for any gas in the unit to dissipate, then repeat steps 1-2 above. IF YOU SMELL GAS, SEE STEP C ABOVE.**

If the burner fails to light after several tries, push the **POWER** button on the control panel and contact a qualified professional service technician.

Adjusting Flame Height

The flame height can be adjusted via the control panel. Press and hold the **AUX CONTROL** button for approximately 3 seconds to increase/decrease the flame height. Each time this is done, the flame height will alternate between the high and low setting.

Shutting Down

To shut down the burner (system will remain on), push the **AUX CONTROL** button (see Fig. 45-1).

To shut down the burner and system (total shutdown), push the **POWER** button (see Fig. 45-1).

Note: Pushing a button will turn off its indicator light.

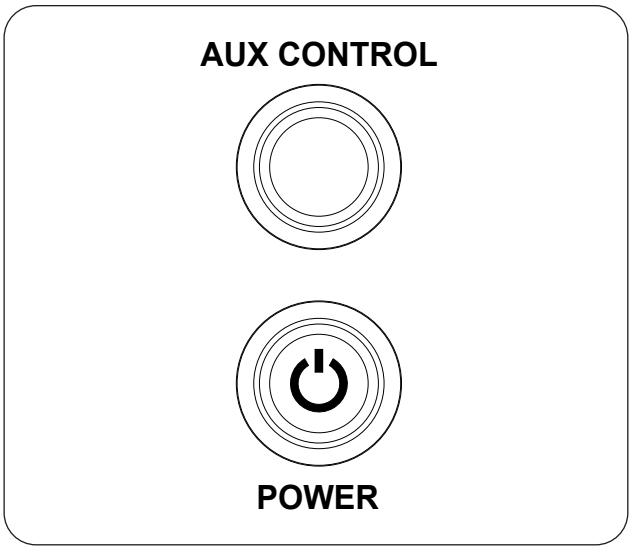

Fig. 45-1 Manual Operation:

Lighting

- push POWER button (system on)
- push AUX CONTROL button (burner on) (hold for 3 seconds to adjust flame height)

Shutting Down

- push AUX CONTROL button (burner off)
- push POWER button (burner and system off)

INSTRUCTIONS D'ALLUMAGE - MODÈLES FYRESTARTER

POUR VOTRE SÉCURITÉ, À LIRE AVANT L'ÉCLAIRAGE

WARNING: SI VOUS NE SUIVEZ PAS EXACTEMENT CES INSTRUCTIONS, UN INCENDIE OU UNE EXPLOSION PEUT SE PRODUIRE, CAUSANT DES DOMMAGES MATÉRIELS, DES BLESSURES CORPORELLES OU LA MORT.

A. Cet appareil est équipé d'un dispositif d'allumage qui allume automatiquement la veilleuse. **N'essayez PAS** d'allumer la veilleuse à la main.

B. **AVANT L'ALLUMAGE,** sentir tout autour de la zone de l'unité pour le gaz. Assurez-vous de sentir près du sol, car certains gaz sont plus lourds que l'air et se déposeront sur le sol.

C. **QUE FAIRE SI VOUS SENTEZ DU GAZS**

1. Coupez l'arrivée de gaz à l'appareil.
2. Éteignez toute flamme nue.
3. Si l'odeur persiste, appelez immédiatement votre fournisseur de gaz ou les pompiers.

D. Utilisez uniquement votre main pour enfoncer les commandes. N'utilisez jamais d'outils. Si la commande ne s'enfonce pas ou ne se déplace pas à la main, **N'essayez PAS** de la réparer. Appelez un technicien de service professionnel qualifié. La force ou une tentative de réparation peut entraîner un incendie ou une explosion.

FONCTIONNEMENT DU BRLEUR - MODE MANUEL

Éclairage

ATTENTION: **N'essayez PAS** d'allumer la veilleuse à la main.

1. Localisez le panneau de commande sur le côté de l'appareil (reportez-vous à la LISTE DES PIÈCES D'IDENTIFICATION si nécessaire), et identifiez les boutons **AUX CONTROL** et **POWER** (voir Fig. 46-1).
2. Appuyez sur le bouton **POWER**. Le voyant s'allumera pour indiquer que le système est activé et prêt.
3. Appuyez sur le bouton **AUX CONTROL**. Le voyant s'allumera et la séquence d'allumage du brûleur commencera.

AVERTISSEMENT: Si la veilleuse ne s'allume pas dans les 15 secondes, ou si le brûleur ne s'allume pas dans les 15 secondes suivant l'allumage de la veilleuse, appuyez sur le bouton POWER du panneau de commande pour l'éteindre. Attendez cinq (5) minutes pour que tout gaz dans l'unité se dissipe, puis répétez les étapes 1 et 2 ci-dessus. SI VOUS SENTEZ DU GAZ, VOIR L'ÉTAPE C CI-DESSUS.

Si le brûleur ne s'allume pas après plusieurs essais, appuyez sur le bouton **POWER** du panneau de commande et contactez un technicien de service professionnel qualifié.

Réglage de la hauteur de la flamme

La hauteur de la flamme peut être réglée via le panneau de commande. Appuyez sur le bouton **AUX CONTROL** et maintenez-le enfoncé pendant environ 3 secondes pour augmenter/diminuer la hauteur de la flamme. Chaque fois que cela est fait, la hauteur de la flamme alternera entre le réglage haut et bas.

Éteindre

Pour éteindre le brûleur (le système restera allumé), appuyez sur le bouton **AUX CONTROL** (voir Fig. 46-1).

Pour arrêter le brûleur et le système (arrêt total), appuyez sur le bouton **POWER (voir Fig. 46-1).**

Note: Appuyez sur un bouton pour éteindre son voyant.

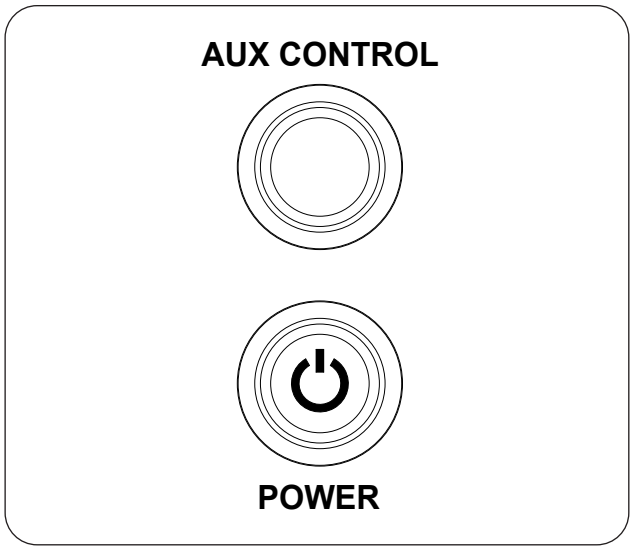

Fig. 46-1 Opération manuelle:

Éclairage

• appuyez sur le bouton POWER (système allumé)

• appuyez sur le bouton AUX CONTROL (brûleur allumé)

(maintenir pendant 3 secondes pour ajuster la hauteur de la flamme)

Éteindre

• appuyez sur le bouton AUX CONTROL (brûleur éteint)

• appuyez sur le bouton POWER (brûleur et système éteints)

BURNER OPERATION - REMOTE MODE

Before Use

Prior to app operation, ensure that the RHP connect app is downloaded and setup.

This bluetooth device has a 30 foot max range of operation, and can only be controlled by one device at a time.

Lighting

CAUTION: DO NOT attempt to light the pilot by hand.

1. Locate the control panel on the side of the unit (refer to the IDENTIFICATION PARTS LIST if needed), and identify the **AUX CONTROL** and **POWER** buttons (see Fig. 47-1).
2. Push the **POWER** button. The light will illuminate indicating the system is on and ready.
3. From within the app, proceed to the Devices screen and select your unit. The remote screen will appear. See Fig. 47-1.
4. Tap the **ON** icon found on the bottom left of your remote screen (see Fig. 47-1).
   The screen will display an orange center flame and moving sparks. The orange center flame and sparks indicate the bluetooth control is on. The **AUX CONTROL** button light will illuminate and the 60 second burner ignition sequence will begin. The burner will light on the high (HI) flame setting.

WARNING: The burner ON/OFF status must be verified in person - it is an attended appliance.

WARNING: If the pilot fails to light within 15 seconds, or if the burner fails to light within 15 seconds of pilot lighting, tap the OFF icon. Allow five (5) minutes for any gas in the unit to dissipate, then repeat step 3 above. IF YOU SMELL GAS, SEE STEP (C) AT BEGINNING OF LIGHTING INSTRUCTIONS.

If the burner fails to light after several tries, push the **POWER** button on the control panel and contact a qualified professional service technician.

Adjusting Flame Height

The flame height can be adjusted via the remote app. Tap the **HI (high)** button to increase the flame height. Tap the **LO (low)** button to decrease the flame height. See Fig. 47-1. (LO setting available after 60 seconds.)

Shutting Down

To shut down the burner (system will remain on), tap the **OFF** icon found on the bottom left of your remote screen. The screen will no longer display the orange center flame and moving sparks. See Fig. 47-1. The **AUX CONTROL** button indicator light will also go off.

Note: A 60 second delay exists prior to relighting.

To shut down the burner and system (total shutdown), or if the remote app is unavailable, push the **POWER** button on the control panel. See Fig. 47-1. The **POWER** and **AUX CONTROL** button indicator lights will go off. (Fully power off when covering or when not in use.)

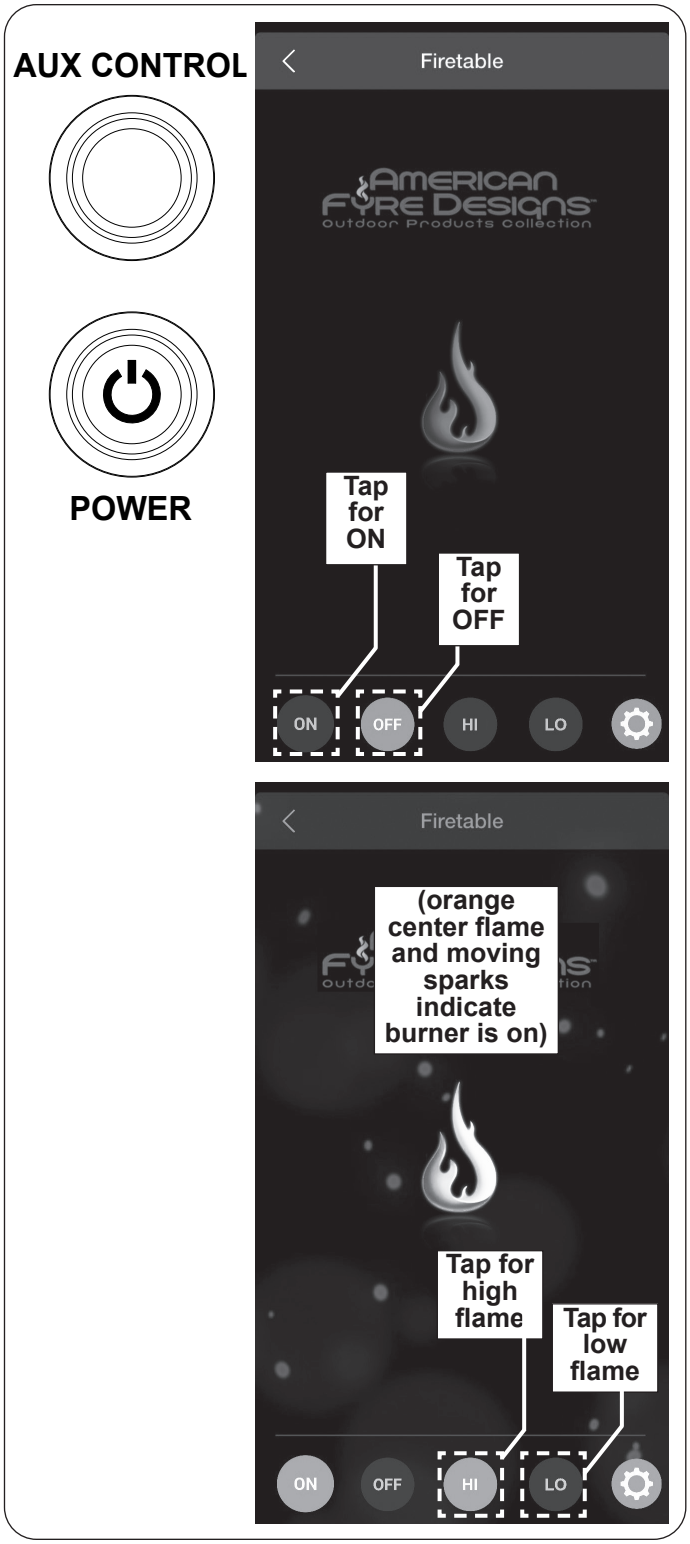

Fig. 47-1 Remote Operation:

Lighting

- push POWER button (system on)
- tap ON icon within remote app (burner on)
- tap H/L icons to adjust flame height

Shutting Down

- tap OFF icon within remote app (burner off)
- push POWER button (burner and system off)

FONCTIONNEMENT DU BRLEUR - MODE À DISTANCE

Avant Utilisation

Avant le fonctionnement de l'application, assurez-vous que l'application RHP connect est téléchargée et configurée. Cet appareil Bluetooth a une portée maximale de 30 pieds en cas de fonctionnement et ne peut être contrôlé que par un appareil à la fois.

Éclairage

CAUTION: **N'essayez PAS** d'allumer la veilleuse à la main.

1. Localisez le panneau de commande sur le côté de l'appareil (reportez-vous à la LISTE DES PIÈCES D'IDENTIFICATION si nécessaire), et identifiez les boutons **AUX CONTROL** et **POWER** (voir Fig. 48-1).
2. Appuyez le bouton **POWER**. Le voyant s'allumera pour indiquer que le système est activé et prêt.
3. Depuis l'application, accédez à l'écran Appareils et sélectionnez votre appareil. L'écran à distance apparaîtra. Voir Fig. 48-1.
4. Appuyez sur l'icône **ON** située en bas à gauche de l'écran de votre télécommande(voir Fig. 48-1).
   L'écran affichera une flamme centrale orange et des étincelles en mouvement. La flamme centrale orange et la flamme des étincelles indiquent que la commande Bluetooth est activée. Le voyant du bouton **AUX CONTROL** s'allumera et la 60 secondes séquence d'allumage du brûleur commencera. Le brûleur s'allumera sur le réglage de flamme élevée (HI).

AVERTISSEMENT: L'état ON/OFF du brûleur doit être vérifié en personne - il s'agit d'un appareil surveillé.

AVERTISSEMENT: **Si la veilleuse ne s'allume pas dans les 15 secondes, ou si le brûleur ne s'allume pas dans les 15 secondes suivant l'allumage de la veilleuse, appuyez sur l'icône OFF. Attendez cinq (5) minutes pour que tout gaz dans l'unité se dissipe, puis répétez l'étape 3 ci-dessus. SI VOUS SENTEZ DU GAZ, VOIR L'ÉTAPE (C) AU DÉBUT DES INSTRUCTIONS D'ALLUMAGE.**

Si le brûleur ne s'allume pas après plusieurs essais, appuyez sur le bouton **POWER** du panneau de commande et contactez un technicien de service professionnel qualifié.

Réglage de la hauteur de la flamme

La hauteur de la flamme peut être ajustée via l'application à distance. Appuyez sur le bouton **H (élevé)** pour augmenter la hauteur de la flamme. Appuyez sur le bouton **L (bas)** pour diminuer la hauteur de la flamme. Voir Fig. 48-1. (Réglage LO disponible après 60 secondes.)

Éteindre

Pour éteindre le graveur (le système restera allumé), appuyez sur l'icône **OFF** située en bas à gauche de l'écran de votre télécommande. L'écran n'affichera plus la flamme centrale orange et les étincelles en mouvement. Voir Fig. 48-1. Le voyant du bouton **AUX CONTROL** s'éteindra également.

Note: Un délai de 60 secondes existe avant le rallumage.

Pour éteindre le brûleur et le système (arrêt total), ou si l'application à distance n'est pas disponible, appuyez sur le bouton **POWER** du panneau de commande. Voir Fig. 48-1. Les voyants des boutons **POWER** et **AUX CONTROL** s'éteignent. (Éteignez complètement lorsque vous couvrez ou lorsque vous ne l'utilisez pas.)

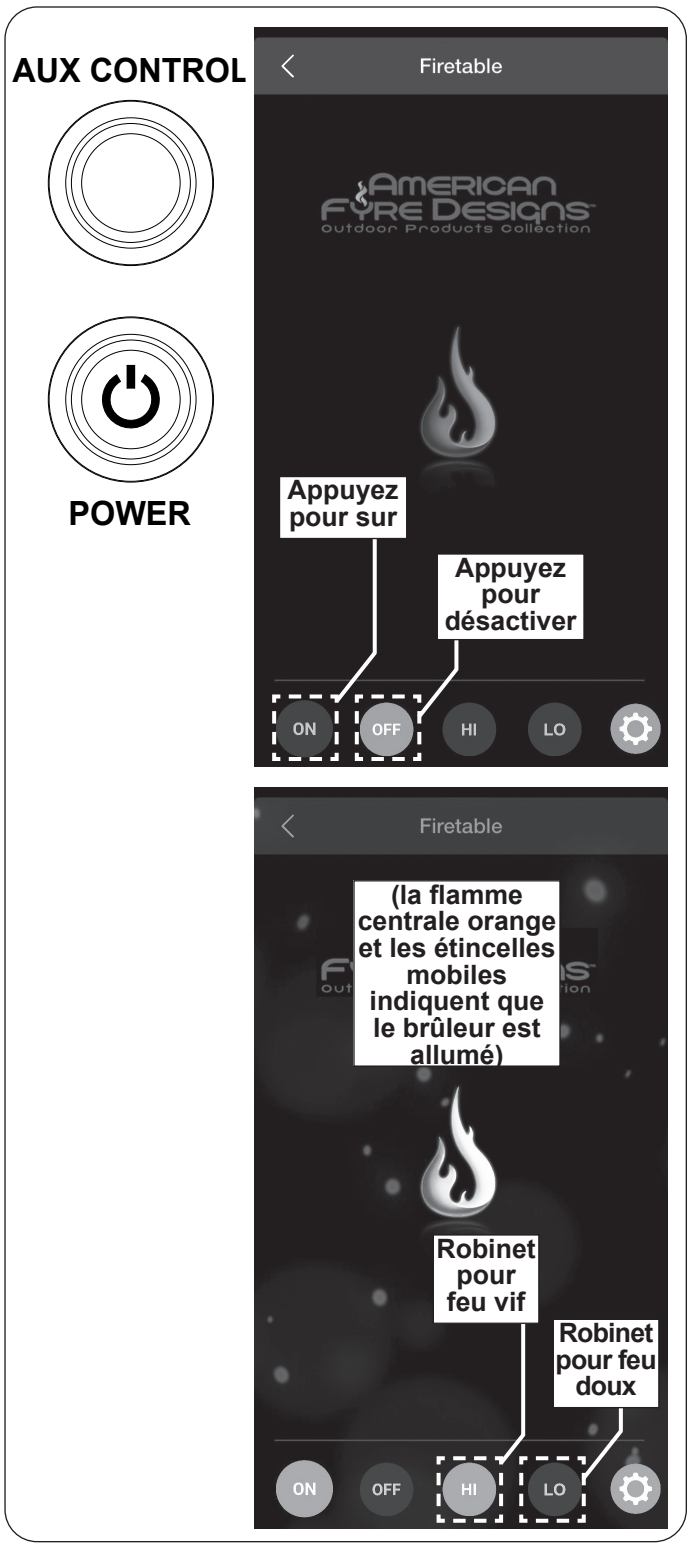

Fig. 48-1 Opération à distance:

Éclairage

- appuyez sur le bouton POWER (système allumé)
- appuyez sur l'icône ON dans l'application distante (brûleur activé)
- appuyez sur les icônes H/L pour régler la hauteur de la flamme

Éteindre

- appuyez sur l'icône OFF dans l'application distante (brûleur éteint)
- appuyez sur le bouton POWER (brûleur et système éteints)

Fyrestarter (H) models are equipped with a USB outlet for charging electronic devices. To use, see Fig. 49-1 and follow the steps below.

TURNING ON AND USE

1. Locate the control panel on the side of the unit (refer to the IDENTIFICATION PARTS LIST if needed), and identify the USB outlet (see Fig. 49-1).
2. Remove the protective cap.
3. Turn on the outlet by pressing the power button.

Note: The outlet's panel will illuminate indicating the system is on and ready.

4. Plug in your device's cord into the desired USB outlet. The outlet has three ports:
   - one 3.0 USB-C port (center)
   - two 3.0 USB-A ports (top and bottom)

TURNING OFF

Turn off the outlet by pressing the power button. The outlet's panel will no longer be illuminated. Be sure to replace the protective cap.

Note: The USB outlet's charger has built-in overload protection features. If the charger slows or stops working while in use, refer to the troubleshooting section for details.

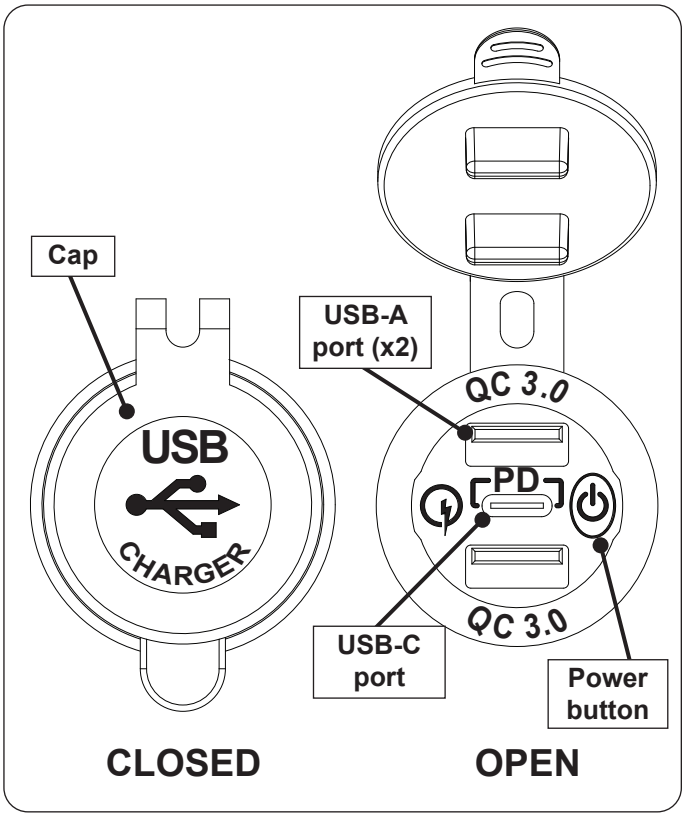

Fig. 49-1 USB outlet overview

INSTRUCTIONS D'ALLUMAGE - MODÈLES DE COMMANDE DE DÉTECTION DE FLAMME MANUELS

POUR VOTRE SÉCURITÉ, LIRE AVANT D'ALLUMER

AVERTISSEMENT: SI VOUS NE SUIVEZ PAS CES INSTRUCTIONS À LA LETTRE, UN INCENDIE OU UNE EXPLOSION POURRAIENT S'ENSUIVRE, CAUSANT DES DOMMAGES MATÉRIELS, DES BLESSURES OU DES PERTES DE VIE.

A. AVANT D'ALLUMER, sentez tout autour de l'unité de surface pour le gaz. Assurez-vous de sentir près du plancher, car certains gaz sont plus lourds que l'air et se déposent sur le sol.

B. QUE FAIRE SI UNE ODEUR DE GAZ

1. Coupez le gaz à l'appareil.
2. Éteindre toute flamme nue.
3. Si l'odeur persiste, appelez immédiatement votre fournisseur de gaz ou le service des incendies.

C. N'utilisez que votre main pour enfoncer ou tourner le bouton de contrôle du gaz. Ne jamais utiliser d'outils. Si le bouton ne sera pas enfoncer ou à tourner à la main, NE PAS essayer de le réparer. Appelez un technicien de service qualifié. Force ou une tentative de réparation pourrait provoquer un incendie ou une explosion.

---

1. ARRÊTEZ! Lisez les informations de sécurité ci-dessus.
2. Localisez le panneau de commande sur le côté de l'appareil (consultez la LISTE DES PIÈCES D'IDENTIFICATION si nécessaire), et identifiez le bouton d'allumage (Fig. 50-1) et le bouton de commande du gaz (Fig. 50-2). Assurez-vous que le bouton de commande du gaz est en position **OFF (éteindre)** avant de commencer la séquence d'allumage.
3. Appuyez sur le bouton de l'allumeur électronique et maintenez-le enfoncé. L'allumeur commencera à étinceler avec un clic rapide.
4. **Tout en maintenant le bouton d'allumage enfoncé,** tournez le bouton de commande du gaz dans le sens antihoraire jusqu'à la position **ON (sur)**, appuyez et maintenez pendant 15 secondes. Votre brûleur devrait s'allumer dans les 5 secondes.
   Maintenir le bouton enfoncé pendant 15 secondes permet à la soupape de sécurité de s'activer et au brûleur de rester allumé.

AVERTISSEMENT: Si le brûleur ne s'allume pas dans les cinq (5) secondes suivant la rotation du bouton de commande, tournez immédiatement le bouton dans le sens des aiguilles d'une montre jusqu'à la position **OFF.**

Attendez environ cinq (5) minutes pour évacuer tout gaz et répétez les étapes 3 à 4 ci-dessus.

Si votre brûleur ne s'allume pas à nouveau, tournez le bouton de contrôle du gaz dans le sens des aiguilles d'une montre jusqu'à la position OFF et contactez votre revendeur ou fournisseur de gaz.

Note: La hauteur de la flamme peut être réglée via le bouton de commande.

Note: **Pour allumer manuellement le brûleur**, allumez une allumette à longue tige ou un briquet au butane à long col et placez la flamme contre la surface du support décoratif près du brûleur. Une fois la flamme en position, continuez avec la procédure ci-dessus.

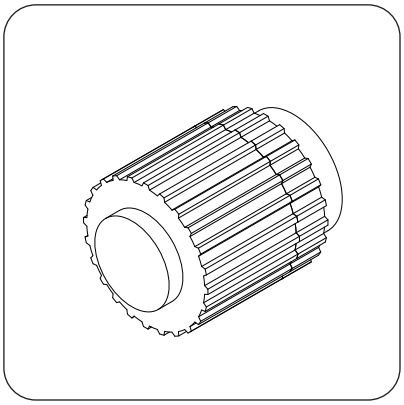

Fig. 50-1 Détail du bouton d'allumage

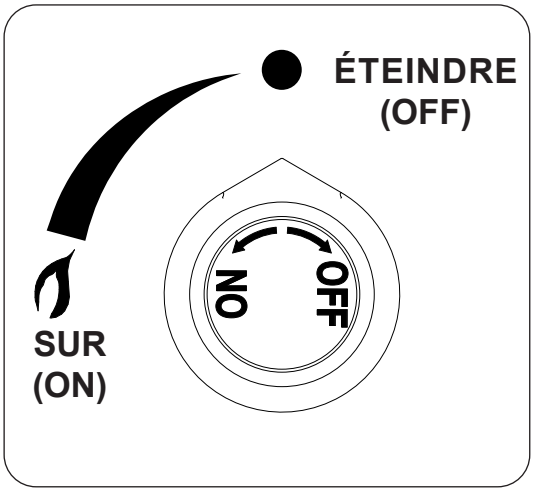

Fig. 50-2 Détail du bouton de commande

POUR ARRÊTER LE GAZ À L'APPAREIL

Pour éteindre votre brûleur à gaz, tournez le bouton de commande du gaz dans le sens des aiguilles d'une montre jusqu'à la position **OFF (éteindre)** (voir Fig. 50-2). Assurez-vous que le bouton de commande est complètement éteint pour éviter toute fuite de gaz.

LIGHTING INSTRUCTIONS - MANUAL FLAME SENSING CONTROL MODELS

FOR YOUR SAFETY, READ BEFORE LIGHTING

WARNING: IF YOU DO NOT FOLLOW THESE INSTRUCTIONS EXACTLY, A FIRE OR EXPLOSION MAY RESULT, CAUSING PROPERTY DAMAGE, PERSONAL INJURY, OR LOSS OF LIFE.

A. BEFORE LIGHTING, smell all around the unit area for gas. Be sure to smell next to the floor, because some gas is heavier than air and will settle on the floor.

B. WHAT TO DO IF YOU SMELL GAS

1. Shut off the gas to the appliance.
2. Extinguish any open flame.
3. If odor continues, immediately call your gas supplier or the fire department.

C. Use only your hand to push in or turn the gas control knob. Never use tools. If the knob will not push in or turn by hand, **DO NOT** try to repair it. Call a qualified professional service technician. Force or attempted repair may result in fire or explosion.

---

1. **STOP!** Read the safety information above.
2. Locate the control panel on the side of the unit (refer to the IDENTIFICATION PARTS LIST if needed), and identify the igniter button (Fig. 51-1) and gas control knob (Fig. 51-2). Ensure the gas control knob is in the **OFF** position before beginning the lighting sequence.
3. Press and hold the electronic igniter button. The igniter will begin to spark with a rapid clicking sound.
4. **While holding the igniter button in,** turn the gas control knob counter-clockwise to the **ON** position, depress, and hold for 15 seconds. Your burner should light within 5 seconds.

   Holding the knob in for 15 seconds allows the safety valve to activate and the burner to remain lit.

WARNING: If the burner does not light within five (5) seconds of turning the control knob, immediately turn the knob clockwise to the **OFF** position.

Wait approximately five (5) minutes to clear out any gas, and repeat steps 3-4 above.

If your burner fails to light again, turn the gas control knob clockwise to the OFF position and contact your dealer or gas supplier.

Note: The flame height can be adjusted via the control knob.

Note: **To manually light the burner,** light a long-stem match or a long-necked butane lighter, and place the flame against the surface of the decorative media near the burner. Once the flame is in position, continue with the procedure above.

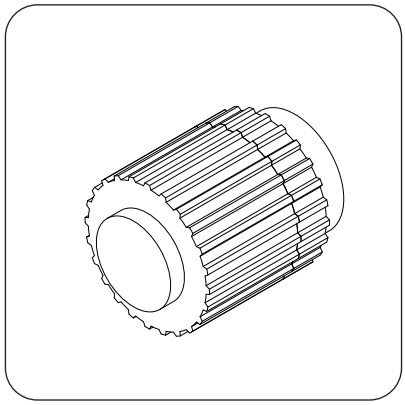

Fig. 51-1 Igniter button detail

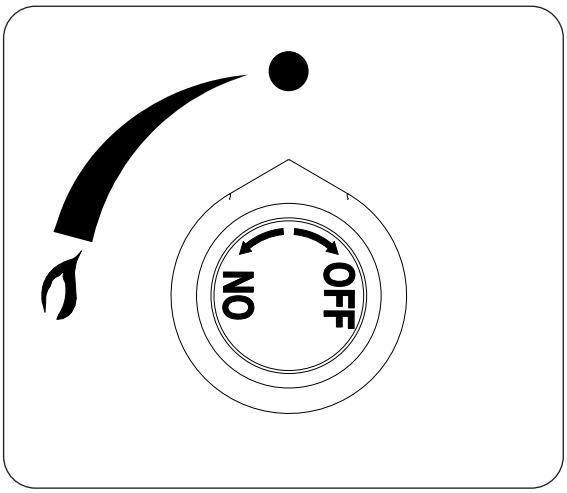

Fig. 51-2 Control knob detail

TO SHUT OFF GAS TO THE APPLIANCE

To extinguish your gas burner, turn the gas control knob clockwise to the **OFF** position (see Fig. 51-2). Be sure the control knob is turned fully off to avoid any gas leakage.

SERVICING AND CLEANING

Each installation site for any unit presents its own unique combustion environment. Specific factors such as weather, wind currents, yard debris, altitude, drafts, the size of the surrounding area, all have an influence on the proper operation of the unit. A normally operating unit will demonstrate the following characteristics:

- A lively, realistic yellow flame
- Odor-free

If the flame is not clean (identifiable by excessive sooting on the decorative media), refer to the information below. Some soot on the media may occur and should not be a concern unless excessive.

- Cover your unit whenever it is completely cool and not in use, and follow the guidelines below at least annually.

ANNUAL CLEAN / INSPECTION GUIDELINES

The unit and the installation must be inspected annually. Refer to these instructions for details. Performing these procedures will ensure proper operation, appearance, and safety. WEAR GLOVES.

If maintenance is required, it must be done by a qualified professional service technician.

- Always shut off the gas to the unit while performing service work.
- Allow the unit to cool before servicing.
- The entire burner system should be inspected regularly:

  Excessive debris can build up on this unit from leaves, dirt, or other debris. It is critical that all control components, burners, pilot/igniter screen, vent openings, and the surrounding area be kept clear and free at all times.

  Examine that all components are properly assembled / installed as instructed in this manual.

  Ensure that all decorative media is properly placed as instructed in this manual.

  Ensure that the pilot/igniter screen on the burner pan is clear of decorative media and any other items/debris.

  Ensure that all gas lines, burner tubes, burner ports, and the orifice are clear of insects, insect nests, spiderwebs, and any debris.

  Replace batteries as needed / if applicable. See BATTERY INSTALLATION/REPLACEMENT section for details.
- The burner assembly must be replaced prior to the unit being put into operation if it is evident that the burner is damaged. Contact your local dealer for replacement parts.
- DO NOT use substitute materials when replacing any components of the appliance.
- **Keep the vent openings and surrounding area of the unit clear and free at all times.**
- Periodically perform visual checks of the burner flames and pilot flames (if applicable). The burner flames should be blue at the base with a combination of blue/yellow at the body and tips. The pilot (if applicable) should be a steady flame, encircling the flame sensor. Contact a qualified professional service technician for maintenance.
- **To maintain the concrete components,** see the CONCRETE CARE section for details.
- Any guard or other protective device removed for servicing the appliance shall be replaced prior to operating appliance.
- Verify proper operation after servicing.

(your model and design may vary)

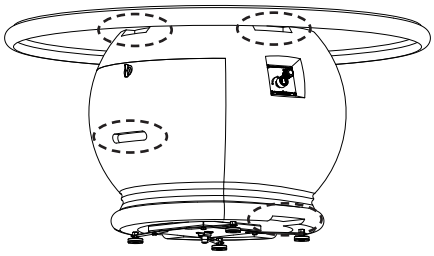

Keep surrounding area and vent openings clear for proper venting

Fig. 52-1

CAUTION: HOT DURING OPERATION AND AFTER USE. Children must be supervised when in the vicinity of this appliance. Serious injury may occur! Children must be alerted to the hazard of high surface temperatures and should stay away to avoid burns or clothing ignition.

CONCRETE CARE

As with any surface, concrete components require regular maintenance and care. Certain guidelines must be followed to preserve the concrete's appearance and structural integrity.

- **Scratches may occur due to usage.** To minimize, avoid striking or dragging heavy, rough, or sharp objects across the unit.
- **Spotting and hairline cracks may occur due to nature of product and are not considered a manufacturing defect.**
- **Concrete products are porous and susceptible to discoloration from liquids (especially oils and acidic substances).** During use, clean up any spills immediately to prevent any possible staining or damage to the finish. Avoid allowing water (or any liquid / substance) to stand on the surface. Using coasters for drinks is highly recommended.
- After each use, clean up as needed.
- **To clean the concrete, first wash with a mild soap and water solution. For stubborn stains, a vinyl brush may be used. Allow to dry. Annually, follow up with a masonry sealer in order to preserve the finish.**
- It should be noted that, like natural stone, concrete products will develop a patina when left outside. No two concrete products are identically the same and the finish will vary.
- **An optional fabric cover is available to protect your unit when cool and not in use (select models).** Contact your local dealer for ordering information.

FUEL CONVERSION KITS

For select models, a certified kit is available from the manufacturer to convert your appliance from natural gas to L.P. or vice versa. Contact your dealer for ordering information.

Follow the instructions provided with the kit when converting.

Note: 785 models are designed as L.P. only and are not convertible.

BATTERY INSTALLATION/REPLACEMENT (if applicable)

- Ensure the unit is connected to the gas line and has been tested for leaks before you insert batteries.
- Turn off the burner and allow the unit to completely cool prior to any battery replacements.
- Prior to inserting batteries, always apply a small amount of dielectric grease to both ends of each battery. This will ensure conductivity and prevent moisture from affecting the contact.
- **Low/dead batteries will affect burner system operation. Replace batteries any time the burner will not turn on.**

The igniter requires 1 AA battery to operate (included). Locate the igniter on the control panel and unscrew the igniter cap (see Fig. 53-1, A). Remove the existing battery (see Fig. 53-1, B). Insert the new battery (negative end first) into the igniter and replace the cap. Screw the cap down until snug. **DO NOT** overtighten.

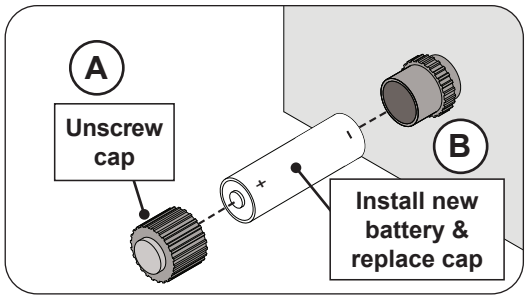

Fig. 53-1 Replace battery (if applicable)

DRAWER REMOVAL FROM SLIDES (if applicable)

Pull the drawer open until the slides are fully extended. Release the drawer from the slides by pressing the black lever up on the left side, and down on the right side (Fig 53-2). Then pull outward on the drawer until it comes free of the runners.

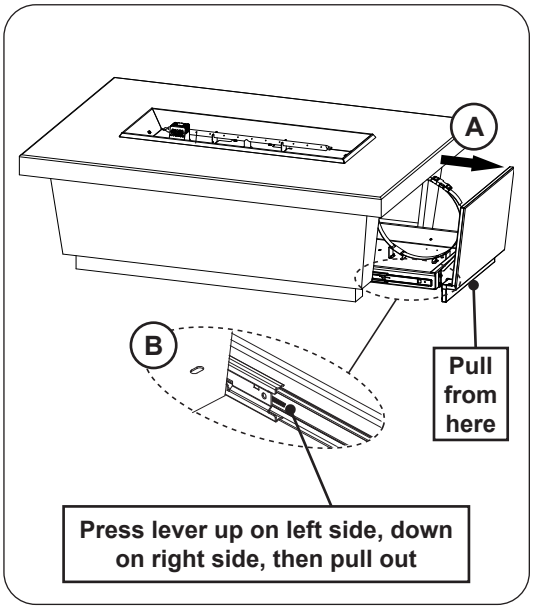

Fig. 53-2 Drawer removal (if applicable)

FUSE RESET (if applicable)

Ensure the unit is unplugged, gas to the unit is off and the burner system is off, and completely cool.

Contempo, Iron Saddle, Legend H Models Only

1. The burner will need to be partially removed. Prior to removal, rest cardboard over the surface of the table top (to prevent damage to the finish when the burner is set aside on the unit). Remove all media. Use a $^{5}/_{16}$" nut driver to partially unfasten the 2-4 screws found on the burner assembly. Then carefully lift out the burner and set it off to the side. See Fig 54-1.

Important: **Lift out with care to prevent damage to the electrical, thermocouple, and gas connections.**

2. Gain access to the valve box and reset the fuse by pushing it in (see Fig. 54-2).

Cosmopolitan H Models Only

1. Remove the storage door by first turning the door handle counter-clockwise, then carefully pulling the door outward. Store in a safe location.
2. Gain access to the valve box and reset the fuse by pushing it in (see Fig. 54-2).

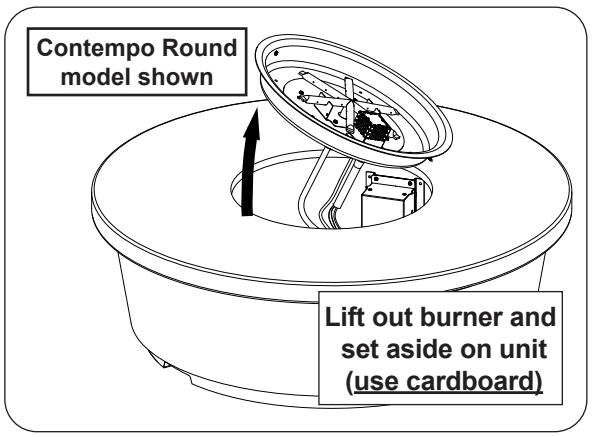

Fig. 54-1 Gain access to interior (if needed)

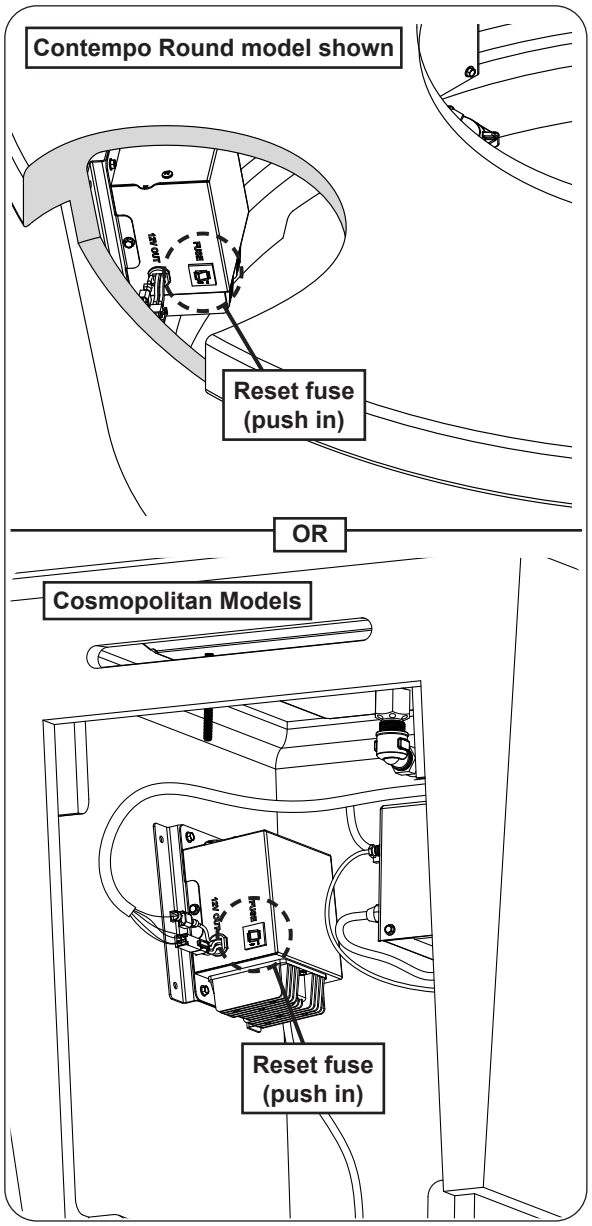

Fig. 54-2 Reset fuse

NOTES PAGE

Please use this page to record any information that you may want to have at hand.

TROUBLESHOOTING

If you have trouble with your unit, please use this list to identify the problem. By trying one or more of the solutions to the probable cause, you should be able to solve the problem. If this list does not address your present problem, or if you have other technical difficulties with your unit, please contact your local dealer or visit our web site at *www.rhpeterson.com*.

BURNER WILL NOT TURN ON

Root Cause	H Models	M Models	Corrective Action
No gas to unit	X	X	Ensure gas supply turned on / shut-off valve open / propane tank not empty.
Air in gas line	X	X	Bleed gas supply line.
No ignition at igniter/pilot	X	X	See following IGNITER WILL NOT FUNCTION symptom for details.
Appliance not receiving power	X	X	M Models: Check/replace batteries. H Models: Check that power supply cord is properly plugged in. Check GFCI. Check building circuit breaker. Ensure Power switch is in ON position.
Loose electrical connection	X	X	Check all connections are secure in place.
Incorrect spark at igniter/pilot	X	X	Ensure igniter/pilot screen is clear of all decorative media. See DECORATIVE MEDIA PLACEMENT section.
Fuse tripped	X		Reset fuse (see FUSE RESET section).
Bluetooth/ App issue	X		Refer to the Bluetooth specific manual also included with your unit for all bluetooth and app details.

UNIT OVERHEATING OR POOR COMBUSTION

Root Cause	H Models	M Models	Corrective Action
Vent openings / surrounding area blocked with debris	X	X	Clean vent openings and surrounding area of all obstructions.
Improper media placement	X	X	See DECORATIVE MEDIA PLACEMENT section.

UNEVEN OR LOW FLAME

Root Cause	H Models	M Models	Corrective Action
Low gas pressure	X	X	Check gas pressure (Read E-F of PRE-INSTALLATION AND PREPARATION SAFETY GUIDELINES section, & check with local gas company).
Low gas pressure/flame (propane)	X	X	Shut off all valves, including propane tank, and follow lighting instructions exactly. (Also see note* below.)
Propane tank running low (if applicable)	X	X	Fill tank completely.
Gas supply blocked or obstructed	X	X	Inspect all gas lines, burner tubes, burner ports, and the orifice for insects, insect nests, spiderwebs, and any debris. Clean as needed.
Too much media on burner	X	X	Remove excess media (refer to DECORATIVE MEDIA PLACEMENT section for proper placement).

Note: *Propane tanks are equipped with a safety shutdown device that may cause low or no gas/flame at the burners if operating and lighting instructions are not followed exactly. **If you suspect the propane tank safety shutoff is in effect:** 1) Shut off unit's valve. 2) Shut off tank valve. 3) Open and close unit's valve. 4) Open tank valve. 5) Follow the LIGHTING INSTRUCTIONS. Lighting instructions are located in your owner's manual and printed on the unit's label plate. Lighting instructions are located in the owner's manual. If the problem persists, continue troubleshooting, or contact your local dealer or distributor for assistance.

LOW FLAME OR TOO HIGH FLAME			
Root Cause	**H Models**	**M Models**	**Corrective Action**
Using natural-gas burner on propane gas or propane burner on natural gas	X	X	Ensure proper gas type. The gas supply used may not be the same as that stated on the unit rating plate. Shut down immediately to verify, and if necessary contact your local dealer. (The unit may be converted to the gas type of the gas supply, IF PERMITTED.)

FLAME LIFTS OFF THE BURNER ASSEMBLY			
Root Cause	**H Models**	**M Models**	**Corrective Action**
Unit exposed to high-wind conditions	X	X	Ensure that the unit is installed in an area that is less susceptible to high wind conditions. **DO NOT operate in high-wind conditions.**

FLAME HEIGHT DROPS WHEN UNIT IS IN OPERATION			
Root Cause	**H Models**	**M Models**	**Corrective Action**
Low gas pressure (due to improper gas supply line)	X	X	Check gas supply line and gas pressure (Read E-F of PRE-INSTALLATION AND PREPARATION SAFETY GUIDELINES section, & check with local gas company).

BURNER LIGHTS BUT WILL NOT STAY LIT			
Root Cause	**H Models**	**M Models**	**Corrective Action**
Low gas pressure	X	X	Check gas pressure (Read E-F of PRE-INSTALLATION AND PREPARATION SAFETY GUIDELINES section, & check with local gas company).
Unit exposed to high-wind conditions	X	X	Ensure that the unit is installed in an area that is less susceptible to high wind conditions. **DO NOT operate in high-wind conditions.**
Clogged burner ports	X	X	Inspect/clean burner ports.
Faulty valve or regulator	X	X	Contact a qualified professional service technician and local dealer.
Bad thermocouple	X	X	Check/replace thermocouple assembly.

BURNER FLASHBACK OR FLAME BURNING OUT OF ORIFICE			
Root Cause	**H Models**	**M Models**	**Corrective Action**
Clogged burner ports	X	X	Inspect/clean burner ports.
Clogged burner orifice	X	X	Clean burner orifice.

EXCESSIVE SOOTING			
Root Cause	**H Models**	**M Models**	**Corrective Action**
Flame not burning correctly / improper media placement	X	X	See DECORATIVE MEDIA PLACEMENT section.
Poor gas quality	X	X	Check gas supply / contact your gas company.

ELECTRONIC DEVICE NOT CHARGING AT USB OUTLET			
Root Cause	**H Models**	**M Models**	**Corrective Action**
No power at USB outlet	X		Check that power supply cord is properly plugged in. Check GFCI. Check building circuit breaker. Ensure USB power button is ON.
Over-charge protection feature enabled	X		Slow charging can be corrected by unplugging one or more device.
Over-temperature protection feature enabled	X		Unplug all devices from outlet. Turn off burner, allow to cool for 1 hour. USB outlet will turn back once reaching a safe temperature.
Faulty USB outlet	X		Check/replace USB outlet.

PILOT WILL NOT IGNITE			
Root Cause	**H Models**	**M Models**	**Corrective Action**
Obstruction in pilot gas supply or pilot gas-supply line is kinked	X		Clear out obstruction. Replace pilot gas-supply line if kinked.
Inadequate gas supply	X		Have gas pressure checked by installer or gas supplier.
Air in line	X		Air should clear; attempt to relight.
Pilot screen covered	X		Ensure screen is clear of decorative media. See DECORATIVE MEDIA PLACEMENT section for details.

IGNITER WILL NOT FUNCTION			
Root Cause	**H Models**	**M Models**	**Corrective Action**
App connection	X		Restart App and reconnect or press AUX switch button.
Loose wires	X	X	Check all wires are securely in place.
Appliance not receiving power	X	X	M Models: Check/replace batteries. H Models: Check that power supply cord is properly plugged in. Check GFCI. Check building circuit breaker. Ensure Power switch is in ON position.
Faulty igniter component(s)	X	X	M Models: Check/replace igniter module and/or electrode. H Models: Check/replace hot surface igniter.
Faulty switch	X		Check/replace switch.
Faulty valve	X		Check/replace valve box assembly.

PILOT LIGHTS, BUT MAIN BURNER WILL NOT			
Root Cause	**H Models**	**M Models**	**Corrective Action**
Loose thermocouple connection	X		Make sure thermocouple threaded connection is tight.
Loose wires	X		Check all wires are securely in place.
No flame verification	X		Check/replace thermocouple.
Faulty valve	X		Check/replace valve box assembly.

PILOT LIGHTS THEN TURNS OFF SOON AFTER			
Root Cause	**H Models**	**M Models**	**Corrective Action**
Valve recalibrating	X		Shut down unit and turn unit back on.
Loose thermocouple wire	X		Check thermocouple fitting and tighten if loose.
Faulty thermocouple	X		Check/replace thermocouple.

PILOT LIGHTS, BURNER LIGHTS THEN TURNS OFF SOON AFTER			
Root Cause	**H Models**	**M Models**	**Corrective Action**
Valve recalibrating	X		Shut down unit and turn unit back on.
Inadequate gas supply	X		Have gas pressure checked by installer or gas supplier.

FYRESTARTER MODELS LED FLASH CODES

For fyrestarter models: The red LED light on the valve box will flash to help diagnose any issues with your fyrestarter unit. Follow the table below for solutions.

LED FLASH	DIAGNOSTIC	CORRECTIVE ACTION
ON	**1.** Normal operation	**1.** Working as intended
OFF	**1.** No power or internal fault	**1.** Check electrical power connections, fuse, and GFCI plug
Slow Flash	**1.** Thermocouple delay (to prove absence of flame)	**1.** Allow thermocouple time to cool down before restart (1 minute)
Fast Flash	**1.** Safety shutdown	**1.** Possible overheat of system, turn off power for 1 hour then restart
2 Flashes	**1.** Ignition trials exceeded without flame	**1.** Possible gas supply issue, check gas pressure and gas lines then reset **2.** Check orifice for debris **3.** Check hot surface igniter
3 Flashes	**1.** Flame loss recycles exceeded	**1.** Check thermocouple for loose connection **2.** Check wires for kink **3.** Replace thermocouple
4 Flashes	**1.** Flame sense self check fault	**1.** Check valve box connections **2.** Check/replace fuse **3.** Check/replace valve box
5 Flashes	**1.** Valve power feedback fault	**1.** Power supply transformer issue, check wire connections **2.** Replace power supply **3.** Replace bluetooth controller

BLUETOOTH OR APP ISSUES

If you have trouble with the bluetooth or app, see the TROUBLESHOOTING section of the bluetooth specific manual also included with your unit for all bluetooth and app details.

AMERICAN FYRE DESIGNS BY R. H. PETERSON CO.
LIMITED WARRANTY

R.H. Peterson Co. ("RHP") warrants your American Fyre Designs® product to be free from defects in material and workmanship.

American Fyre Designs ("AFD") exterior Glass Fiber Reinforced Concrete (GFRC) fire features ("products"), fireplaces, fire tables, fire urns, fire pits, fire bowls, lanterns, firefalls, gas logs, burners, and stainless steel firepit burners for outdoor installation are warranted for **THREE (3) YEARS**.

AFD electrical components, valves, accessories and controls (excluding batteries, wind guards and screens) are warranted for **ONE (1) YEAR**.

This warranty **does not** apply to: product damage caused by burning wood or any fuel other than natural gas or propane; or damage or discoloration to product used in high wind conditions.

A COPY OF YOUR SALES SLIP FOR PROOF OF PURCHASE IS REQUIRED

This warranty applies to the original purchaser for products which are installed in the United States or Canada and which are operated and maintained as intended for single family residential usage (if the unit is installed in a commercial / multi-user setting, a separate Commercial / Multi-User Limited Warranty applies and is available from RHP). This warranty is valid only with proof of purchase, commences on the date of purchase, and terminates (both as to original and any replacement products) on the anniversary date of the original purchase of the product per the above schedules.

This warranty **does not** cover parts which become defective as a result of negligence, misuse, or use not in compliance with the Installation and Owner's Manual, accidental damage, improper handling, improper storage, improper installation, **lack of required routine maintenance** (as specified in the Installation and Owner's Manual), electrical damage, local gas impurities or failure to protect against combustible materials. Product must be installed (and gas must be connected) as specified in the Installation and Owner's Manual by a **qualified professional installer**. This warranty **does not** apply to normal occurrences that may be expected with any outdoor product such as rust, corrosion, oxidation, or discoloration unless the affected part becomes inoperable. RHP products including valves, pilots and controls are designed and certified to be used as a system. Modifications to products which are not specifically authorized will void this warranty and could render the product to be unsafe. Burners, valves, parts, remotes, accessories, etc. used with this product must be RHP products or this warranty is void.

Warrantied items will be repaired or replaced at RHP's sole discretion. This warranty **does not** cover labor or labor related charges, except as provided by separate specific written programs from RHP. All repair work must be performed by a qualified professional service person and requires prior approval of RHP.

RHP may require the defective product or part to be returned to the factory to determine the cause of failure. RHP will pay freight charges if the product or part is determined to be defective. This warranty does not cover breakage in shipment from our independent distributor to its customer if the damage is determined to have occurred during that shipment.

This warranty specifically excludes liability for **indirect**, **incidental**, or consequential damages. Some states and provinces do not allow the exclusion or limitation of incidental or consequential damages, so the above exclusion may not apply to you. This warranty gives you specified legal rights, and you may have other rights that vary from state to state or province.

For additional information regarding this warranty, or to place a warranty claim, contact the RHP dealer where the product was purchased.

When contacting your RHP dealer or the R.H. Peterson Co., please provide the following information:

- Your name, address, telephone number, e-mail
- Sales receipt showing where purchased and date purchased
- Model number, serial number of product, date code
- Relevant information: installer, additions, repairs, when defect was first noted

TO REGISTER YOUR PRODUCT ONLINE GO TO: WWW.RHPETERSON.COM, AND CLICK ON PRODUCT REGISTRATION. THANK YOU FOR YOUR PURCHASE.

Model #:	
Serial #:	

Quality Check			**Date:**_____	
Burner Orifice	**Nat.**	**L.P.**	**Leak Test:** _____	
Main:	____	____	**Burn Test:** _____	
Other:	____	____	**Gas Type:** Nat. / L.P.	**Inspector:** _____